NO. 74 NOTES FROM THE SHOP $3.95

Woodsmith®

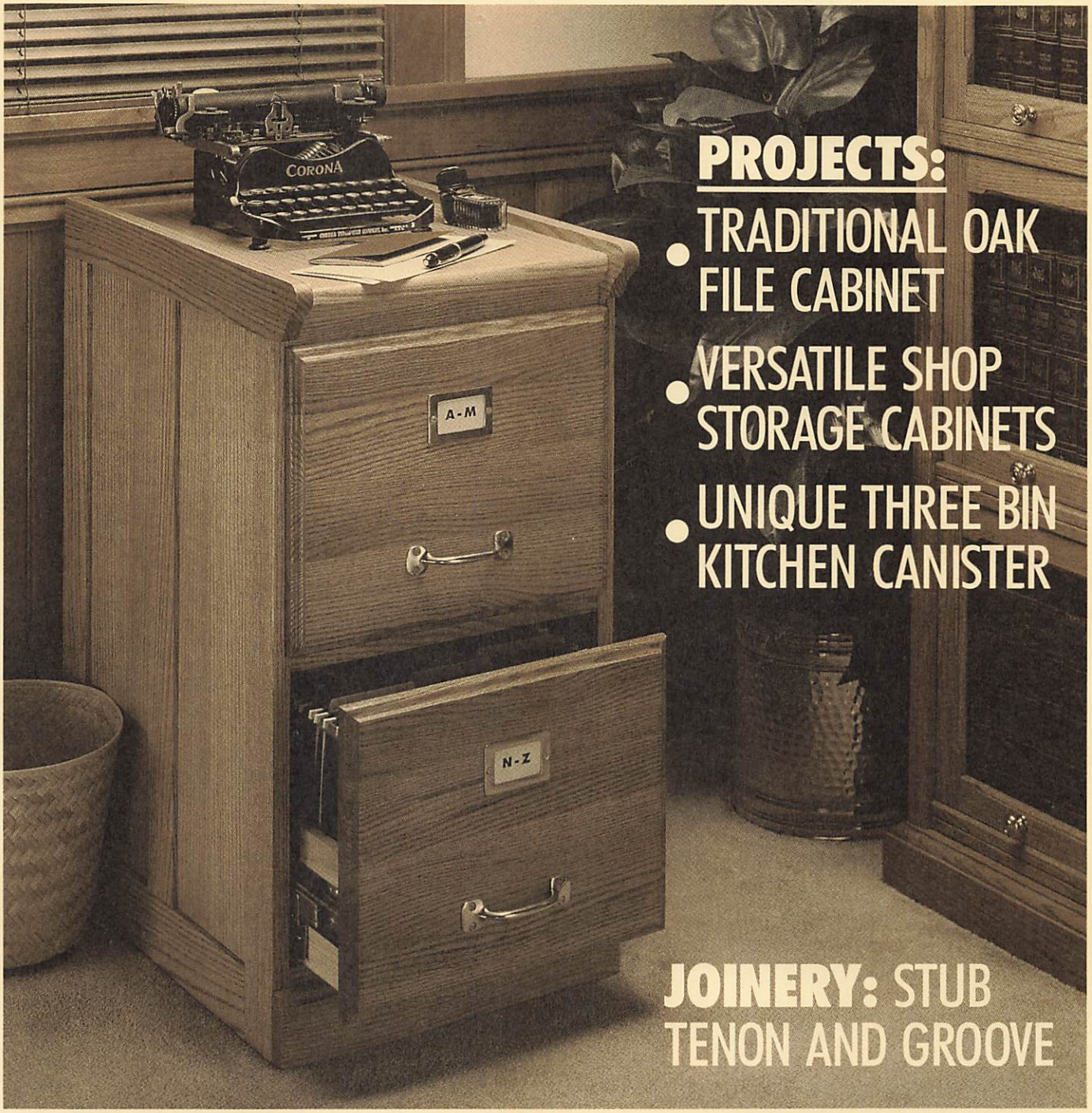

PROJECTS:

- TRADITIONAL OAK FILE CABINET
- VERSATILE SHOP STORAGE CABINETS
- UNIQUE THREE BIN KITCHEN CANISTER

JOINERY: STUB TENON AND GROOVE

No. 74 April, 1991

Woodsmith®

Editor Donald B. Peschke
Design Director Ted Kralicek
Managing Editor Douglas L. Hicks
Associate Editor Terry J. Strohman
Assistant Editors James M. Dolan, Richard S. Peters, Gordon Gaippe
Project Designer Ken Munkel
Illustrators David Kreyling, Cary Christensen, Rod Stoakes, Chris Glowacki, Dirk Ver Steeg, Kurt Schultz
Circulation Director Liz Bredeson
Subscription Manager Sandy Baum
Newsstand Sales Kent A. Buckton
Graphics Director Jon Snyder
Project Supplies Leslie Ann Gearhart, Linda Jones
Warehouse Kelly Bradford, Mgr., Scott Rhodes, Gloria Sheehan
Customer Service Mgr. Linda Morrow
Customer Service Jennie Enos, Janice Kerkove, Jozlyn Pross, Genelle Branson, Mic Smith, Jerry Vancini, Roberta Rush
Controller Paul E. Gray
Bookkeeping Linda O'Rourke
Network Administrator Douglas M. Lidster
Administrative Asst. Cheryl A. Scott
Sourcebook Jean Myers
Shop Manager Steve Curtis
Building Maintenance Ken Griffith, Archie Krause
Store Managers:
Des Moines, IA Kent Welsh
Berkeley, CA Michael DeHaven

Woodsmith® (ISSN 0164-4114) is published bimonthly (Feb., April, June, Aug., Oct., Dec.) by Woodsmith Publishing Company, 2200 Grand Ave., Des Moines, IA 50312. Printed in U.S.A.
Woodsmith® is a registered trademark of Woodsmith Publishing Company.
©Copyright 1991 by Woodsmith Publishing Company. All rights reserved.
Subscriptions: Single copy: $3.95. One year (6 issues) $17.95. Two years (12 issues) $31.95. Canada/Foreign $21.95 per year, U.S. funds.
Second Class Postage Paid at Des Moines, IA and at additional offices.
Postmaster: Send change of address to *Woodsmith*, Box 10718, Des Moines, IA 50350.

EDITOR'S COLUMN

Sawdust

Two or three years ago I was giving serious thought to building a new bench for my shop. Well actually, I didn't want a bench as much as I wanted a work surface at a comfortable height, and lots of storage beneath it.

I looked through a few books and saw a Shaker bench that came close to what I was looking for. Shaker benches have massive European-style tops (with a screw vise on one end and a shoulder vise on the front).

Beneath this top is a large cabinet with doors and drawers for holding all sorts of things. Exactly what I needed — but with a simpler top. I sketched out my version, but it was a monster. As I tried to whittle it down to a more compact size, the idea of making several smaller cabinets popped up.

I got together with Ted, Ken and Doug and we came up with all sorts of options and ideas. The whole concept is to build storage cabinets that can be easily changed however you want them — even adding a top if you want a "bench."

The overall design is somewhat similar to the frame and panel cabinets beneath the old Shaker benches. However, each cabinet is designed to stand on its own, or be combined with other cabinets.

For example, the photo on page 18 shows the bench in a typical shop setting. It has two cabinets with a simple top. It's also shown on the Details page (page 32) with a large square top placed on four modular units. And, it's shown on the Contents page as just one cabinet with a small top for mounting a single tool (like a scroll saw).

There are other options as well. We used Masonite for the panels. But you could use pegboard to hang tools. Or rabbet the edges of ½" plywood and use it for the panels. This way you could drill holes and mount holders for storing clamps and some jigs that have nowhere else to go.

A word about the height of each cabinet. The height is 37¼" (including the top). This is higher than most workbenches. But these cabinets are not designed for the same kind of work.

Workbenches are usually designed at a height that's comfortable for using hand tools (like planes, chisels, or even routers). This cabinet/bench is designed as a counter-height work surface.

Well, you can see I'm excited about all the options for this cabinet/bench idea. We've made several cabinets to replace the hodgepodge of storage we used to have in our shop here at *Woodsmith*. And someday I'll get to work on one for my shop at home.

FILE CABINET. Our feature project for this issue is an old-fashioned file cabinet. How did we choose the file cabinet?

One of the most important factors in choosing a project for *Woodsmith* is the letters we get from readers. If you would like to see a particular project, we want to know about it. Every suggestion we get is added to our list for the future.

In fact, we've even started sending out some surveys to a limited number of subscribers to get their opinions on projects. It's not exactly a Gallup poll, but it will help us determine what projects and techniques to feature in *Woodsmith*.

HELP WANTED. A little over a year ago I ran a "Help Wanted" ad in this column asking for people interested in being an editor at *Woodsmith*. As a result of that "ad" we were fortunate to find Jim, Gordon, and Rick who have joined us as assistant editors.

Once again we are looking for editors. To qualify, you must have a sincere interest in woodworking, and a background in writing. If you're interested, write us a letter explaining what you've been doing in the areas of woodworking and writing.

In return, we'll send you a letter describing the job in more detail. (Send your letter to Doug Hicks, Managing Editor, 2200 Grand Ave., Des Moines, IA 50312.)

MORE HELP WANTED. Since we had such good luck with this approach for editors, I thought I'd also try it for one other position we have available.

We are looking for a Catalog Marketing Director for *Woodsmith Project Supplies*. Again, the main requirements for this job are an interest in woodworking, a background in writing, and some experience in the catalog or mail order business.

Just write a letter explaining your background, and I will return a letter explaining the job in more detail. (Send this letter to Don Peschke, same address as above.)

NEXT ISSUE. The next issue of *Woodsmith* (No. 75) will be mailed during the week of May 27, 1991.

Don

A LOOK INSIDE

Contents

Tips & Techniques 4 *Six great tips from fellow woodworkers. 1) Enlarging a Hole using a Router. 2) Router Table Vacuum. 3) Radial Saw Hold Down. 4) Adjustable Miter Fence. 5) Ripping Thin Strips. 6) Modifying Stikit Sanding Pads.*

Oak File Cabinet 6 *We built a classic oak file cabinet using a simple frame and panel technique. Then we added solid brass hardware and full extension drawer slides.*

Stub Tenon & Groove 12 *One of the simplest ways to join the pieces of a frame and panel is to use a stub tenon and groove joint. This article takes you through the process step-by-step.*

Shop Notes 16 *1) Shop-made Wood Pulls. 2) Gluing Up Cabinets So They're Square. 3) A Tenon-Cutting Jig for the Router.*

Shop Cabinets 18 *Nobody's storage needs are exactly the same. So we designed these cabinets to accept a variety of drawer or door combinations.*

Drawer Joints 25 *We discuss the pros and cons of different lipped drawer joints. And what to look for when choosing one.*

Kitchen Canister 26 *All you need is a weekend to build this solid oak canister. Each lid flips open to reveal an airtight container.*

Talking Shop 28 *Routing with a trammel point — which way to go? What is Reaction Wood? Miter Jigs for the Radial Arm Saw. And Ogee or Roman Ogee?*

Clamp Organizers 30 *The results are in for our clamp organizer contest. Here are the three winners: a Sliding "T" Rack, a C-Clamp Rack, and a Pipe Clamp Rack.*

Sources 31 *Hardware and project supplies needed for the projects in this issue.*

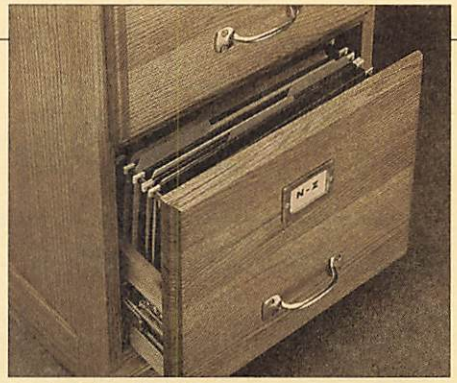

Oak File Cabinet *page 6*

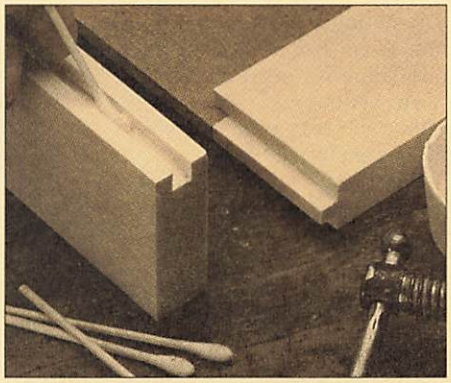

Stub Tenon & Groove *page 12*

Shop Cabinets *page 18*

Tips & Techniques

ENLARGING A HOLE

■ I needed to enlarge a hole, but didn't have a drill bit big enough to do the job. So I came up with a way to enlarge the hole using a router and two bits.

It's a two-step process. Start by routing a rabbet around the inside edge of the hole using a rabbeting bit, see Fig. 1. Then, turn over the workpiece, and remove the ledge (or lip) with a flush trim bit, see Fig. 2.

For example, I had a 2" diameter hole, and needed to increase its diameter to 3½" (an increase of 1½"). I started by using a ⅜" rabbeting bit and routed a rabbet around the inside of the hole. That increased the diameter of the opening ¾" but left a ledge around the bottom edge of the hole, see Fig. 1a.

To remove the ledge, I turned the workpiece over and routed it off with a flush trim bit, see Fig. 2. The bearing on the flush trim bit ran along the just enlarged surface of the hole, see Fig. 2a.

Then I repeated these steps to increase the opening another ¾" for a total of 1½". Repeat the process as many times as necessary to get the hole diameter you want. Remember that the hole diameter will increase by twice the size of the rabbet bit.

Note: Some manufacturers now sell a rabbeting set that includes one rabbet bit and several different-sized bearings. So it's easy to enlarge the hole in larger or smaller increments just by changing the bearing.

If you can't get to the workpiece from the bottom, another way to remove the ledge is to use a straight bit with the bearing on *top*, see Fig. 3. This way you can rout off the ledge from the top. These bits are available from several companies and are called template routing bits.

This same technique can be used to make a workpiece smaller, see Fig. 4. For instance, if you have a circular cutout or an irregularly-shaped piece, simply rout a rabbet around the outside edge. And then remove the ledge with a flush trim bit.

Paul E. Mobley
Savannah, Georgia

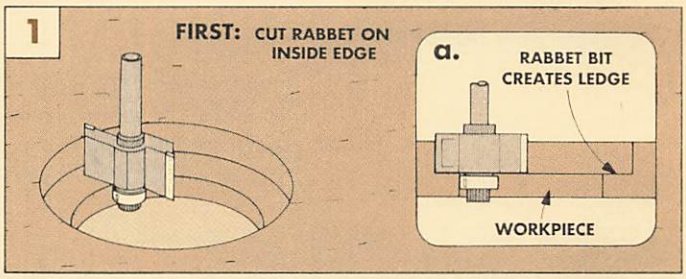

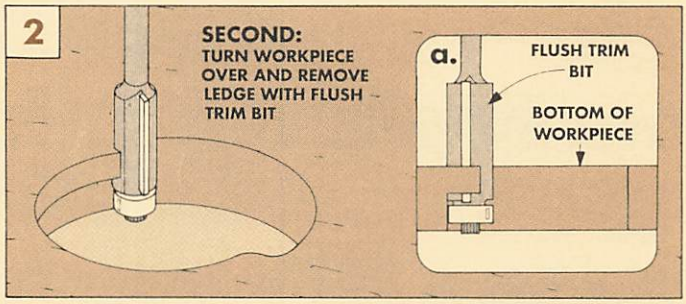

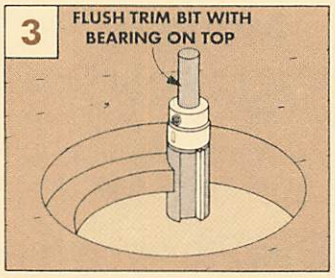

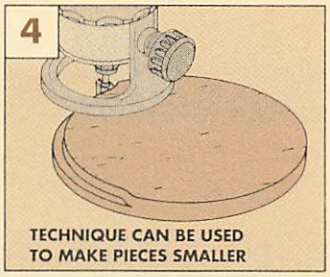

ROUTER TABLE VACUUM

■ Here's an easy, inexpensive way to turn your shop vac into a dust collector for your router table. Just attach a vacuum upholstery nozzle to the back of the router table fence, see Fig. 1.

All you need to do is make a couple of small blocks with one rabbeted edge, see Fig.1. The rabbet should be deep enough to hold the end of the nozzle against the fence.

Now screw these blocks to the back of the router table fence, see Fig. 1.

You could also buy a nozzle and permanently mount it to the fence (they cost about $8.00). Just screw the nozzle to the back of the fence, centered over the opening.

Dave Young
Plano, Texas

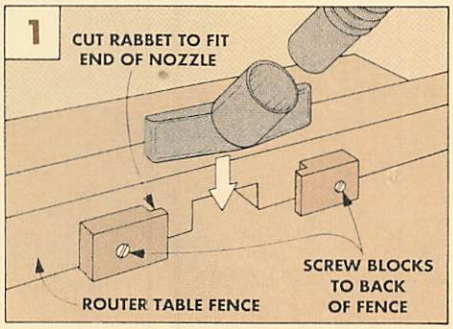

RADIAL ARM SAW HOLD-DOWN

■ Recently I had to cut a lot of small pieces on my radial arm saw. I don't like to have my fingers close to the blade, so I made this simple hold-down from scrap and a C-clamp.

The hold-down is made up of two parts: an arm and a riser block. The arm is ½"-thick, 1"-wide and long enough to go from the fence to the edge of the saw table. The riser block is the same thickness as the workpiece and about 3" long.

To use the hold-down, set the arm on the workpiece and the riser. Then clamp as far in on the arm as the C-clamp will reach. The arm holds the workpiece against the saw table and fence.

Tom B. Gunter
Corpus Christi, Texas

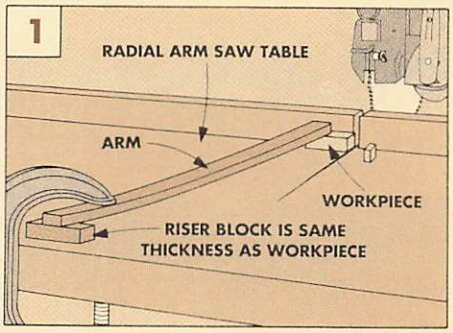

ADJUSTABLE MITER FENCE

■ Before making a number of picture frames, I made an adjustable hardwood fence for the miter gauge on my table saw, see Fig. 1. It improves accuracy and safety by supporting the workpiece right up close to the blade.

The fence is made of two interlocking parts—a short rabbeted top piece that's screwed to the miter gauge. And a long rabbeted bottom piece with a tall face glued to its front. When the machine screws are tightened, the long piece is pinched against the face of the miter gauge. Since the fence can be moved to the right or left, it can be used on either side of the blade.

(Note: This fence is designed for miter gauges with slotted faces. If yours isn't slotted, drill holes through the miter gauge for the machine screws 1½" up from the bottom edge.)

To make this adjustable fence, I started by cutting the rabbeted top and bottom pieces from a single piece of ¾"-thick stock. Next, rip it 1¼" wide. Then, cut a rabbet in one edge exactly half the thickness of the piece (⅜") and ½" deep.

Now, cut a 6"-long piece from one end. This is the top piece that will be screwed to the miter gauge. The long piece is the bottom of the fence. To create the pinching action, sand or plane 1/32" off the rabbeted face of the top piece, see detail in Fig. 2.

Next, install threaded inserts in the top piece, see Fig. 2. They are aligned with the slots or holes in the miter gauge face.

Now cut the front face for the fence from ¾" hardwood 2" wide (high) and 21" long. Then glue it to the front edge of the long rabbeted piece, see Fig. 2.

Dick Lehmann
Wausau, Wisconsin

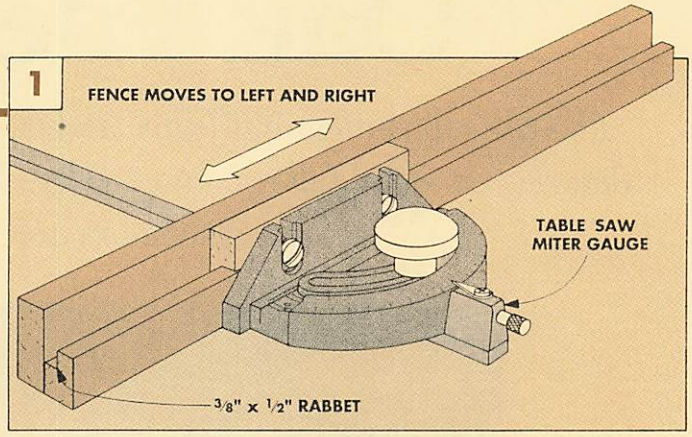

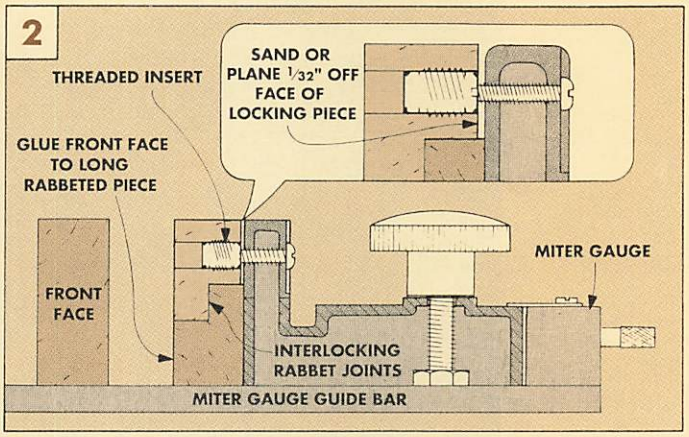

RIPPING THIN STRIPS

■ A recent project called for a large number of thin strips. But the blade opening in my table saw insert was too wide to support the thin strips as I cut them.

Making a new insert that fit tighter around the blade would solve the problem. But I didn't have the time to make one. Instead, I cut the strips safely by covering part of the saw table with ¼" Masonite, see Fig. 1.

To do this, set the rip fence to cut the thin strips. Then lower the blade and butt the Masonite up tight against the fence. Now clamp it to the table or attach it with double-sided carpet tape.

Then turn on the saw and raise the blade through the Masonite, see Fig. 1a. This creates a tight fit all around the blade.

Eugene A. Fisher
Plymouth, Michigan

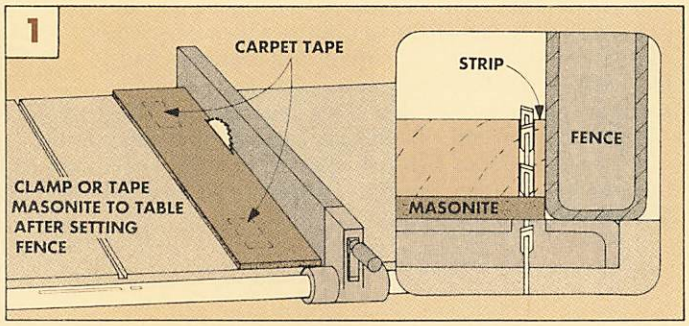

MODIFYING STIKIT PADS

■ I purchased a conversion pad for my Makita quarter-sheet palm sander so I could use Stikit sandpaper. But I was disappointed that I couldn't use the dust collector feature on my sander. The new pad didn't have holes for the dust to pass through. So I modified the conversion pad, see Fig. 1.

It's a two-step process. Start by drilling six 5/16"-diameter holes in the pad's aluminum backing plate (not the pad). To mark the centers for the holes, use the sandpaper hole puncher that comes with the sander.

Next, melt holes through the foam pad with a hot soldering iron. Using the holes in the aluminum plate as a template, plunge the hot tip through the pad using a circular motion.

Richard G. Bingham
Maybrook, New York

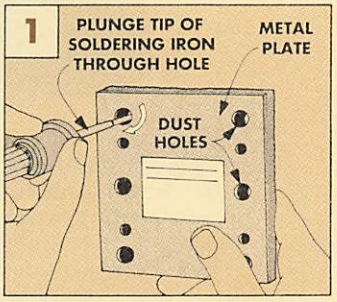

SEND IN YOUR TIPS

If you would like to share a tip or idea, just send it to *Woodsmith*, Tips and Techniques, 2200 Grand Ave., Des Moines, Iowa 50312.

We will pay upon publication $15 to $100 (depending on the published length of the tip). Please include an explanation and a sketch or photo (we'll draw a new one).

Oak File Cabinet

This file cabinet features frame and panel construction and dovetailed drawers that ride on metal full extention slides. To simplify building the cabinet, we used stub tenon and groove joinery.

At first glance, this cabinet appears to be a replica of a classic oak file cabinet with traditional frame and panel construction and heavy brass hardware. And it is — on the outside. But what you can't see are the changes we've made to the inside.

CONSTRUCTION. In the original cabinets, the frame and panel sides were built using mortise and tenon joints and solid wood panels. The frames had to be extra strong because the wood panels were designed to "float" in grooves in the frame. This allowed the wood panels to move with changes in humidity.

The first change was to replace the solid wood panel with one made from ¼" oak plywood. Since plywood doesn't move with humidity changes, I could glue the panel in the solid oak frame. Gluing the panel in place strengthens the frame so much that deep mortise and tenon joints aren't needed to hold it together.

So a simpler version of the mortise and tenon, a stub tenon and groove, could be used. (We've included a technique article on this joint on pages 12 to 15.)

HARDWARE. The second change is the drawer slides. Older file cabinets usually used wooden or metal slides which limited how far the drawer could be pulled out.

For this cabinet, I used high quality Accuride metal full extension slides. Full extension slides allow the file drawers to be pulled all the way out — which means no more groping in the back of a half-open drawer to find a file. (*Woodsmith Project Supplies* is offering a complete hardware kit for the file cabinet, see Sources, page 31.)

FINISH. To finish the file cabinet, I started by staining with a coat of General Finishes Sealacell (Pecan). Then, to provide a durable surface, I applied two coats of General Finishes Royal Finish.

EXPLODED VIEW

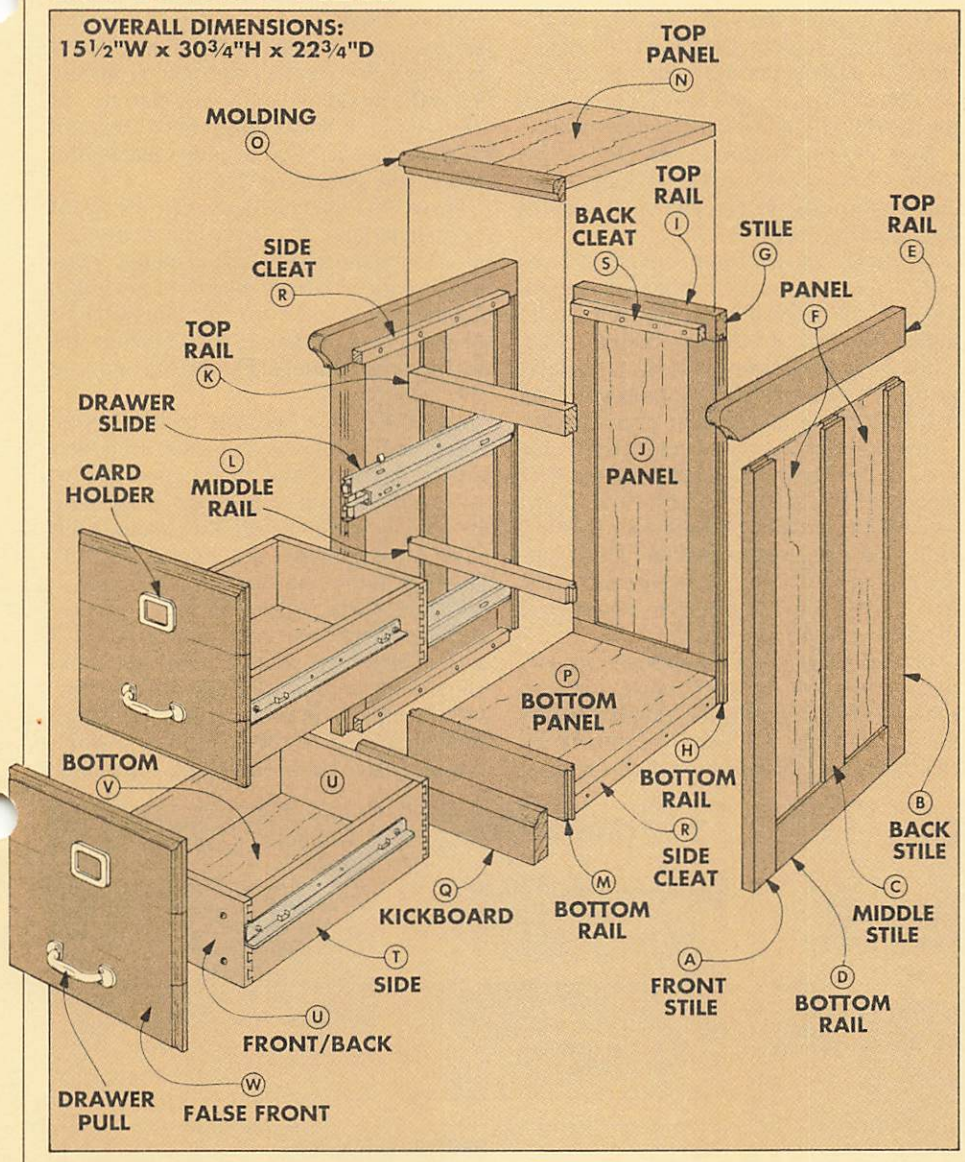

MATERIALS

SIDE PANELS		
A	Front Stiles (2)	¾ x 2½ x 28½
B	Back Stiles (2)	¾ x 2½ x 28½
C	Middle Stiles (2)	¾ x 2½ x 25¾
D	Bottom Rail (2)	¾ x 3 x 16½
E	Top Rail (2)	¾ x 2½ x 22¾
F	Panel (4)	¼ ply - 7¼ x 25¾
BACK		
G	Stile (2)	¾ x 2½ x 25¾
H	Bottom Rail (1)	¾ x 3 x 14½
I	Top Rail (1)	¾ x 2 x 14
J	Panel (1)	¼ ply - 10 x 25¾
FRONT		
K	Top Rail (1)	¾ x 1¾ x 14
L	Middle Rail (1)	¾ x 1 x 14½
M	Bottom Rail (1)	¾ x 3¾ x 14½
TOP/BOTTOM		
N	Top Panel (1)	¾ ply - 14 x 20¼
O	Molding (1)	¾ x 1¼ x 14
P	Bottom Panel (1)	¾ ply - 14 x 19½
Q	Kickboard (1)	¾ x 3 x 15½
R	Side Cleat (4)	¾ x 1¼ x 19½
S	Back Cleat (1)	¾ x 1¼ x 12½
DRAWERS		
T	Side (4)	½ x 5¼ x 19⅝
U	Front/Back (4)	½ x 5¼ x 13
V	Bottom (2)	¼ ply - 12½ x 19½
W	False Front (2)	¾ x 12 x 14½

SUPPLIES

- 13.8 Bd. Ft. of ¾"-thick Red Oak
- 6 Bd. Ft. of ½"-thick Poplar (for drawers)
- (1) ½ sheet of ¼"-thick Oak plywood
- (1) ¼ sheet of ¾"-thick Oak plywood
- (2 pair) 20" Accuride Drawer Slides
- (2) Brass Drawer Pulls
- (2) Brass Card Holders
- (1 pint) General Finishes Pecan Stain
- (1 pint) General Finishes Royal Finish

CUTTING DIAGRAM

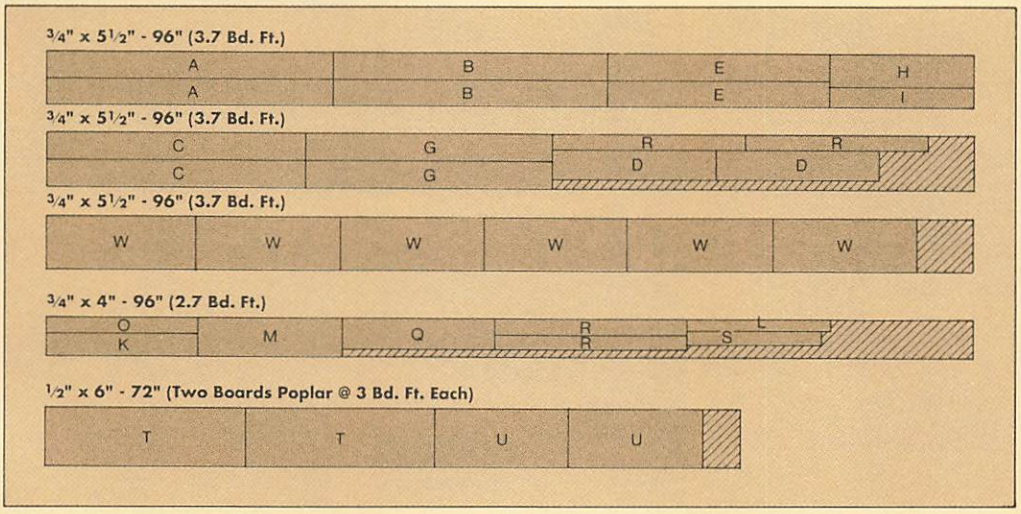

PLYWOOD

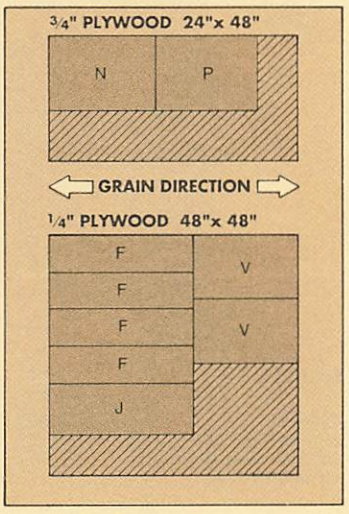

SIDES

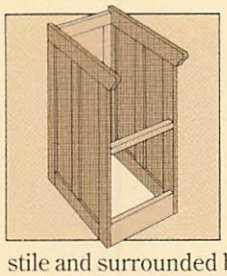

I began work on the File Cabinet by building the two side frames. The sides are mirror images of each other. Each one consists of two plywood panels separated by a middle stile and surrounded by a solid oak frame.

The frames are built by joining three stiles (a front, middle, and back), and two rails (a longer top and shorter bottom) with stub tenons and grooves, see Fig. 1. For details on making this joint, refer to page 12.

FRAMES. To make the two side frames, begin by ripping enough ¾"-thick stock for six stiles to a finished width of 2½". Then, cut two **front (A)** and two **back (B) stiles** to a finished length of 28½". And, cut two **middle stiles (C)** 2¾" shorter (25¾").

Although the top and bottom rails are also cut from ¾"-thick stock, they differ in both width and length, see Fig. 1. The shorter bottom rail fits *between* the front and back stiles. And it's cut wider than the top rail for appearance. The top rail is cut longer and extends *past* the front stile to create a decorative end, see Fig. 1.

To determine the width (height) of the bottom rails, subtract the length of a middle stile (25¾") from that of a front stile (28½"), see Fig. 1. Then, to allow for a stub tenon on the middle stile, add ¼" to the difference.

Now cut two **bottom rails (D)** to this width (3" in my case) and 16½" long. Then, cut two **top rails (E)** to a finished width of 2½" and length of 22¾".

GROOVES. The next step is to cut grooves on the *inside* edges of the frame pieces, see Fig. 2. I cut the grooves on the table saw to match the thickness of the plywood. Note: Since the actual thickness of ¼" plywood is rarely ¼", make test cuts in scrap wood and use the plywood as a guide to check the fit.

There are also grooves cut on the inside *faces* of the front and back stiles for assembling the case, refer to Fig. 10. Note: These grooves can be a full ¼"-wide since they will hold solid wood tenons and tongues. Locate the grooves ¼" from the *front* edge of the front stile (A) and ¼" from the *back* edge of the back stile (B), see Fig. 4.

CUT PROFILE. Once the grooves are cut, the next step is to cut a decorative profile on the top rails (K). To do this, transfer the profile shown in Fig. 3 to the *front* end of each rail. Then, cut and sand the rails to shape.

STUB TENONS. Next, cut ¼"-long stub tenons on the *top* end of the front (A) and back (B) stiles. Also cut stub tenons on *both* ends of the middle stiles (C) and bottom rails (D), see Fig. 1. Sneak up on these cuts until the thickness of the stub tenon matches the width of the groove, see Fig. 2.

PLYWOOD PANEL. To determine the size of the panels, first dry clamp the frames together with the middle stile centered. Then measure the width and length of the frame openings and add ½" to each dimension for the grooves in the frame. Now, cut four ¼"-thick plywood **panels (F)** to size (in my case 7¼" x 25¾").

ASSEMBLY. Now the side frames can be assembled. Note: Since there's an inside and outside to each frame, it's a good idea to dry-assemble both frames and make sure the grooves cut in the stiles are facing each other for a mirrored set, refer to Fig. 10. Then glue and clamp up each side frame.

FILLER STRIP. After the sides are assembled, there's one more thing to do — fill the part of the grooves that are visible on the fronts of the top rails, see Fig. 5. To do this, cut two strips to fit in the grooves and glue them in, see Fig. 6. Then, trim and sand the strips to match the profile on the top rails.

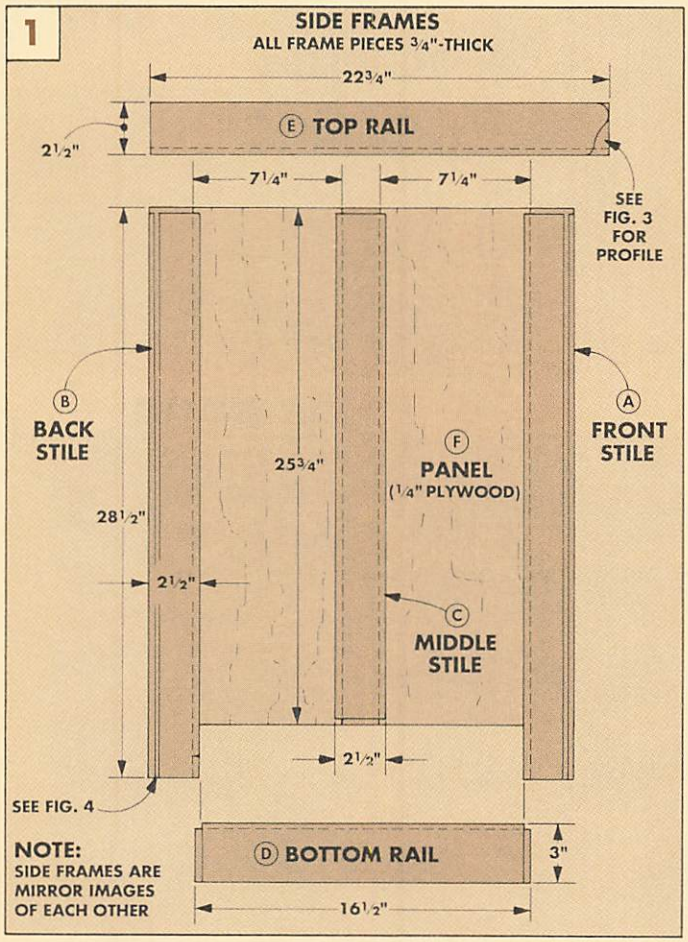

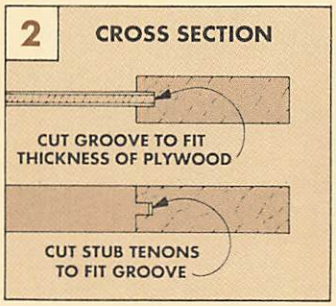

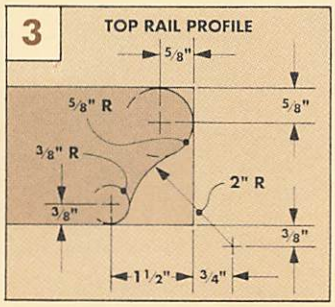

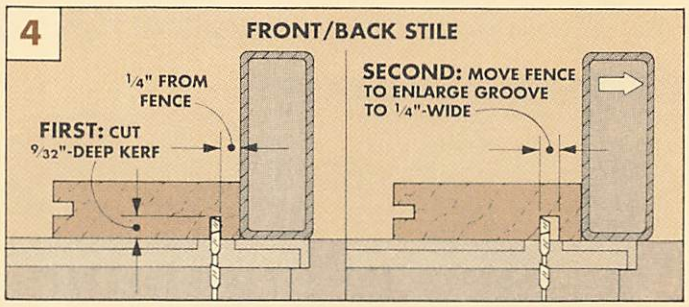

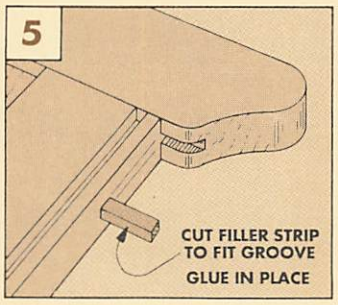

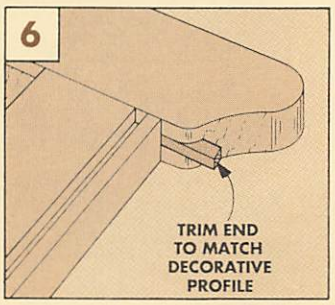

BACK AND FRONT

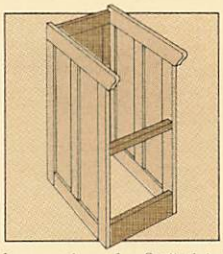

Once the side frames are complete, work can begin on the back. The back is also a frame that's joined to the sides with a tongue and groove joint.

BACK FRAME. Start by cutting the 3/4"-thick frame parts, see Fig. 7. Cut two **back stiles (G)** 2½" wide and 25¾" long. Then, cut a **bottom rail (H)** 3" wide and 14½" long. The 2"-wide **top rail (I)** won't have tenons on the ends, so cut it ½" shorter (14" long). Next, cut grooves on the *inside* edges of the frame parts as you did for the side frames.

CUT TENONS. The next step is to cut ¼"-long stub tenons on both ends of each stile (G) and bottom rail (H), see Fig 7. Note: *Don't* cut tenons on the shorter top rail (I).

CUT TONGUES. To join the back to the sides, cut ¼"-long tongues along the outside edge of each back stile (G). Cut the tongues to fit the grooves in the sides, see Fig. 8.

BACK PANEL. To determine the size of the back panel, dry clamp the frame together. Then, measure the inside width and length and add ½" to each dimension for the grooves. Now, cut a ¼"-thick plywood **back panel (J)** to this size, see Fig. 7.

BACK ASSEMBLY. Begin assembling the back by first gluing the plywood back panel (J) between the stiles. Then glue and clamp the rails to the stiles. Note: Make sure the shoulders of the stiles align with the ends of the top rails, and with the shoulders of the stub tenons on the bottom rail, see Fig 8.

CABINET ASSEMBLY. After the glue dries, the next step is to glue the back frame to the cabinet sides. Before gluing up this U-shaped assembly, I dry-clamped it to check the fit — and I'm glad I did because the top rails of the cabinet didn't align. For the rails to align correctly, there's a little area of the tongue on each back stile (G) that has to be cut off, see Fig. 9. After trimming this off, glue the back to the sides, see Fig. 10.

FRONT. The next step is to add a bottom and middle rail to the front of the cabinet (the top rail is added later). Cut the rails to the same length (14½"), but different widths. The **middle rail (L)** is 1"-wide and the **bottom rail (M)** is 3¾"-wide. Then cut ¼"-long stub tenons on the rail ends, see Fig. 10.

Next, attach the rails to the front by gluing the bottom rail (M) flush with the bottom of the side frames, see Fig. 10a. To position the middle rail, cut two 11½"-long filler strips to fit the grooves in the sides, and glue these in place, see Fig. 10a. (See page 21 for details on filler strips.) Then, glue the middle rail (L) in the groove so it sits on the filler strips. Finally, cut two more strips to fill the grooves above the rail, see Fig. 10.

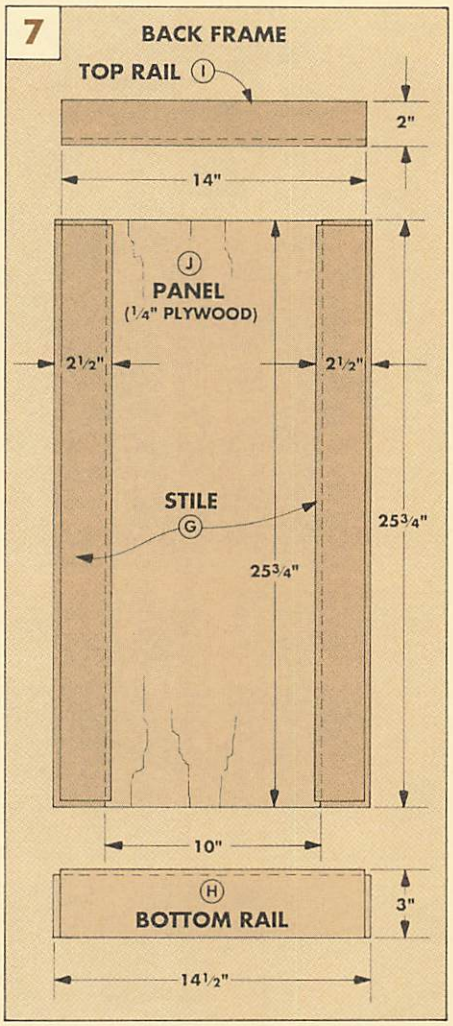

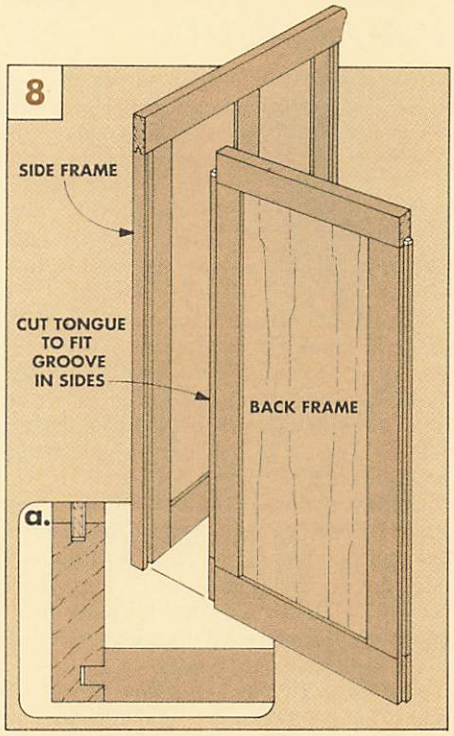

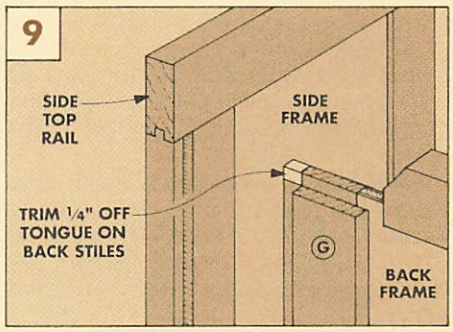

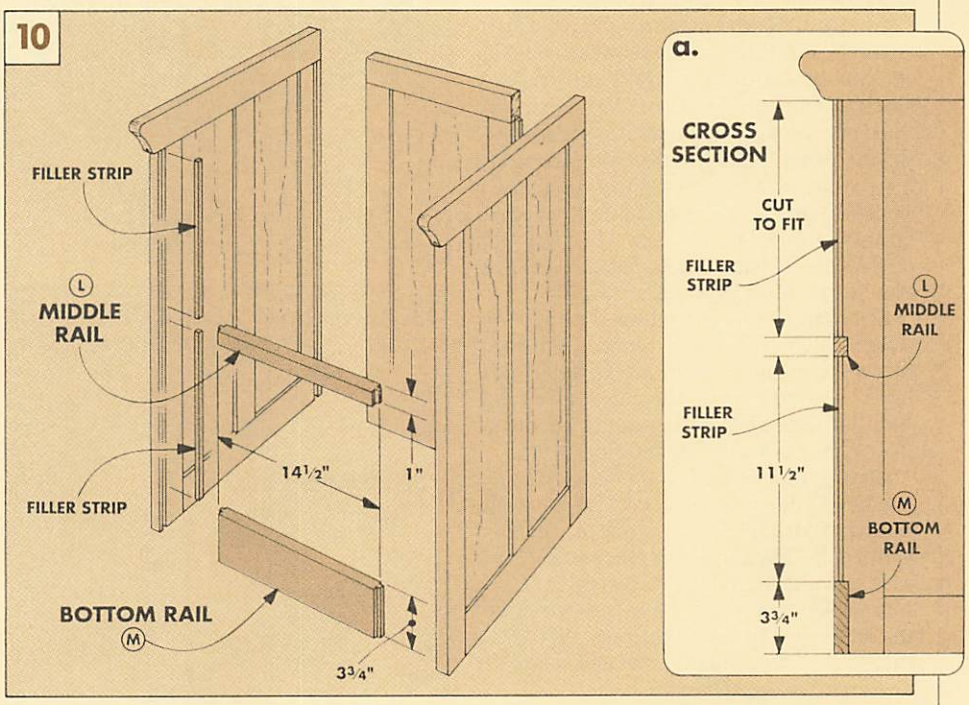

TOP/BOTTOM

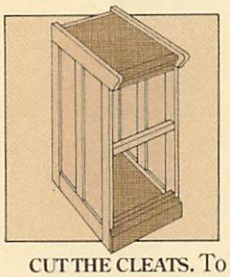

After gluing up the cabinet, the next step is to add a ¾"-thick plywood top and bottom panel. Both panels are glued to cleats that are screwed to the sides, see Fig. 11.

CUT THE CLEATS. To determine the length of the ¾"-thick side cleats, measure the distance from the back frame to the inside edge of the bottom rail, refer to Fig. 14. Now cut four 1¼"-wide **side cleats (R)** to this length (19½"). Then, drill four countersunk shank holes through each cleat, see Fig. 13.

ATTACH CLEATS. Once the holes are drilled, screw two of the cleats to the sides so the plywood top will be flush with the top edge of the cabinet back once it's installed, see Fig. 13. Then, cut a 1¼"-wide **back cleat (S)** to fit between the side cleats and screw it to the back panel, see Fig. 11.

TOP RAIL. There's one more "cleat" to make, but this one serves two purposes. It not only supports the top, but acts as a front rail. Cut this ¾"-thick **top rail (K)** to a width of 1¾" and to length to fit between the side frames (14"). Then glue it to the exposed ends of the side cleats, see Fig. 11. (This end grain joint will be strengthened later when the top panel is added.)

TOP PANEL. To determine the length of the top panel, measure from the *inside* face of the back to the *outside* edge of the front rail (K). Then, to find the width, measure between the two side frames. Now, cut the **top panel (N)** to size (in my case, 14" x 20¼"), and glue it to the cleats and top rail (K).

MOLDING. Next, I made a molding strip to cover the front edge of the plywood, see Fig. 12. Cut this **molding (O)** from ¾"-thick stock to a finished width of 1¼". Then trim the piece to length so it matches the width of the top panel (N). Now, rout a profile using a ⅜" round-over bit on the top edge, and a 1⅜"-diameter ogee bit (not a Roman ogee) on the bottom, see Fig. 12a. (For more on ogees, see Talking Shop, page 29.) Then, glue the molding in place, see Fig. 13.

BOTTOM. After completing the top, I installed the bottom panel. Start by screwing the two remaining side cleats (R) flush to the inside bottom edge of the cabinet, see Fig. 14a. Then, cut a **bottom panel (P)** to fit into the cabinet and glue it to the side cleats.

KICKBOARD. To protect the base of the file cabinet, I added a kickboard. Cut the **kickboard (Q)** from ¾"-thick stock to a finished width of 3". Then trim this piece so it's flush with the outside edges of the cabinet, see Fig. 15. Next, rout an ogee on the top edge of the kickboard to match the ogee on the top rail, see Fig. 15a. Finally, glue and clamp the kickboard to the cabinet.

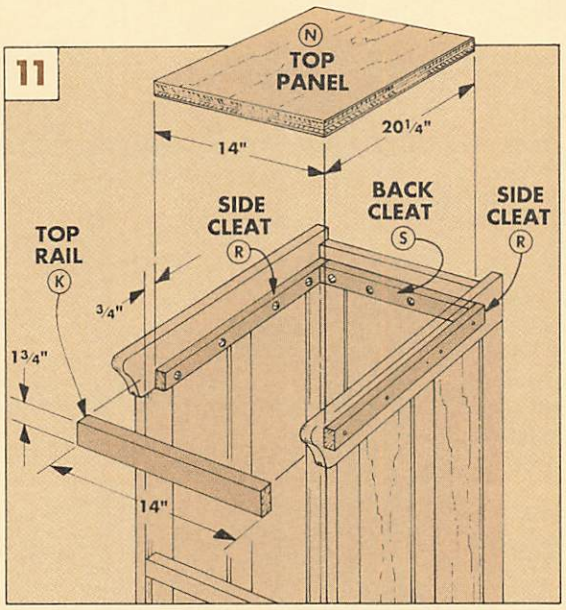

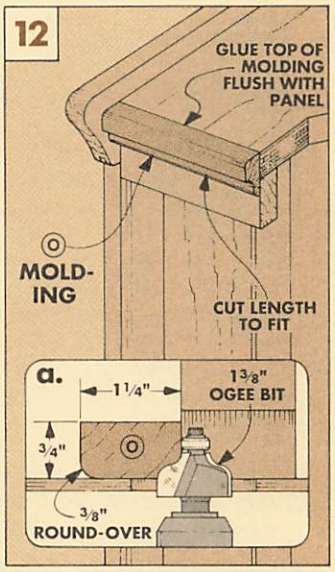

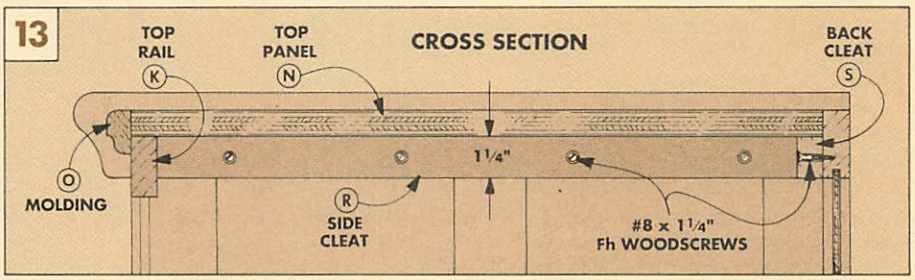

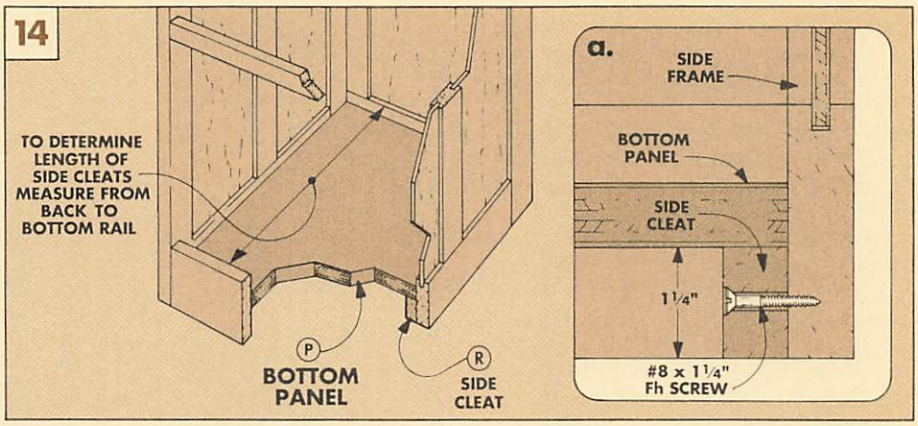

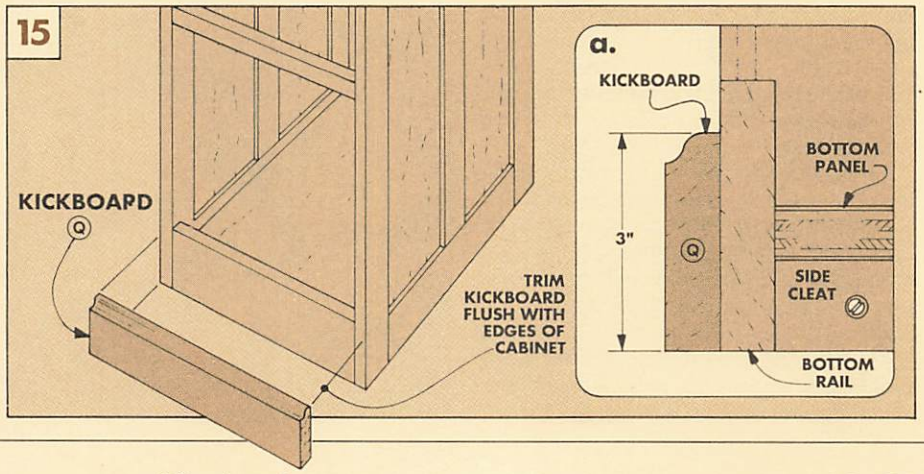

DRAWERS

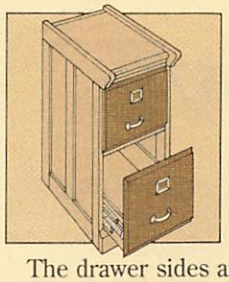

With the top and bottom complete, work can begin on the drawers. I used poplar to make the drawer box, and screwed on oak fronts to match the cabinet, see Fig. 16.

The drawer sides are joined to the front and back with half-blind dovetails using a router and dovetail jig. (For more on dovetails and plans for a jig, see *Woodsmith* No. 58.)

The metal slides I used need ½" of clearance on each side, so the finished size of the drawer is 1" less than the opening.

SIDES. To build the drawers, start by cutting the pieces from ½"-thick stock. Cut four **sides (T)** to a finished width of 5¼" and length of 19⅝", see Fig. 16. Then, cut four **front/backs (U)** to the same width as the sides and to length 1" less than the drawer opening (13").

After the drawer pieces have been cut to size, rout the dovetail joints on the ends of the pieces, see Fig. 17.

BOTTOM. The next step is to cut a ¼"-deep groove for the ¼" plywood bottom, see Fig. 17. Cut the width of the groove to match the thickness of the plywood. (Note: Sometimes this thickness is less than a ¼".) Then, cut a **bottom (V)** to fit the drawer (mine measured 12½" x 19½").

ASSEMBLY. Start assembling each drawer by inserting a bottom (V) into the grooves cut in the sides and front/back. Then, glue and clamp the drawer together.

FALSE FRONTS. Once the drawers are assembled, begin work on the oak **false fronts (W)**. Start by gluing up enough ¾"-thick stock to make two 13" x 16" drawer blanks.

When the glue is dry, measure the width and length of the drawer openings and add ½" to each dimension (for a ¼" overhang on each side). Then, cut two false fronts (W) to this final size (mine measured 12" x 14½").

Next, rout the same ogee edge on all four sides as routed on the front molding (O), see Fig. 12a. Set the fronts aside for now — they're attached to the drawers later.

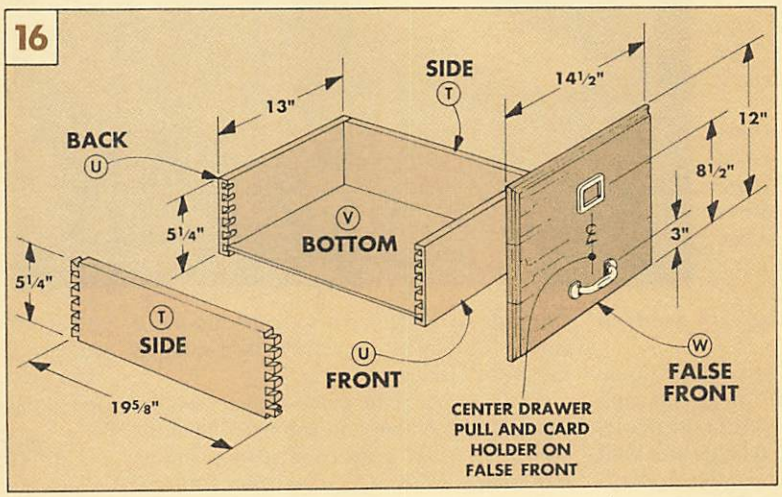

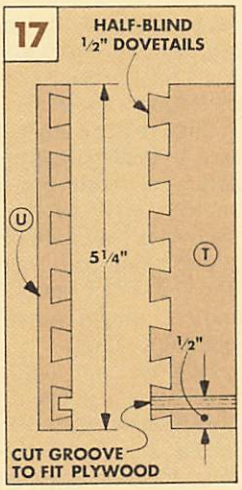

HARDWARE

Before attaching the hardware, I first applied the finish. I wiped on a coat of General Finishes Sealacell (Pecan) to all the oak parts. And when that was dry, I applied two coats of General Finishes Royal Finish (Satin) over all the parts of the file cabinet.

FALSE FRONTS. The next step is to attach the false fronts. To do this, drill four equally spaced counterbored shank holes in each drawer, see Figs. 18 and 18a.

Then, mark a line on the inside face of each false front, ½" up from the bottom, see Fig. 18. Next, place a false front face down on your workbench and then center a drawer on its length. Align the bottom edge of the drawer with the reference line, see Fig. 18.

To locate pilot holes in the false fronts, insert an awl through each of the four shank holes and make a mark. Then, remove the drawer and drill 3/32" holes, ½"-deep in each false front. Next, screw the fronts to the drawers with roundhead woodscrews.

SLIDES. The drawers can be mounted in the cabinet once the fronts are attached. I used 20" Accuride slides. (See Sources, page 31. Detailed instructions for installing the slides are included with the slides.)

To install these drawer slides, locate one pair ¼" up from the middle rail (L), and the other pair ¼" up from the bottom rail (M), see Fig. 19. Then, attach the L-brackets to the drawers flush with the false fronts, and slide the drawers in the cabinet, see Fig. 18.

(Note: If the false fronts aren't level, you can adjust them by either loosening the roundhead screws and repositioning them or by adjusting the Accuride slides.)

DRAWER HARDWARE. To attach the drawer hardware, drill holes centered on the width of the fronts, refer to Fig. 16. Finally, screw the brass drawer pulls and card holders to the fronts of the drawers.

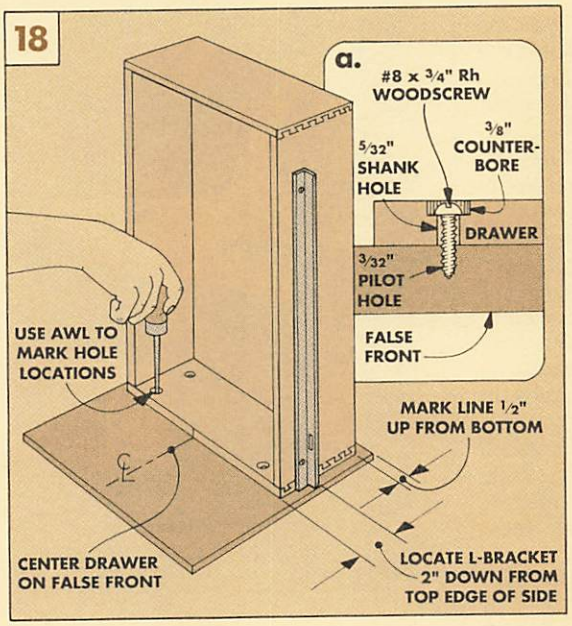

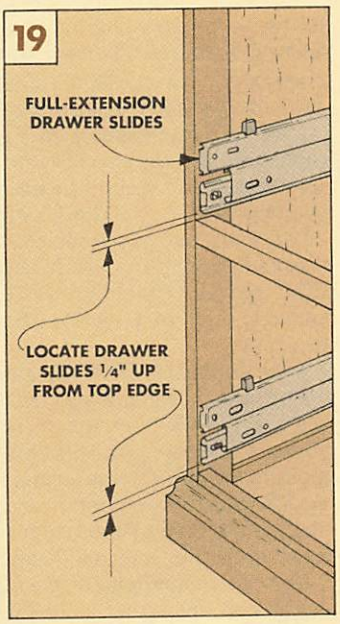

Stub Tenon & Groove

Frame and panel construction is one of the hallmarks of traditional woodworking. It's the technique that's frequently used in making doors and cabinet frames.

Typically, a frame and panel is made by joining the frame with mortise and tenon joints. The panel rests in grooves cut along the edges of the frame.

But a mortise and tenon isn't the only joint that can be used on a frame and panel project. If the panel is plywood (or another man-made material), I often use a stub tenon and groove joint. The Oak File Cabinet (page 6) and the Shop Cabinet (page 18) are both examples of this.

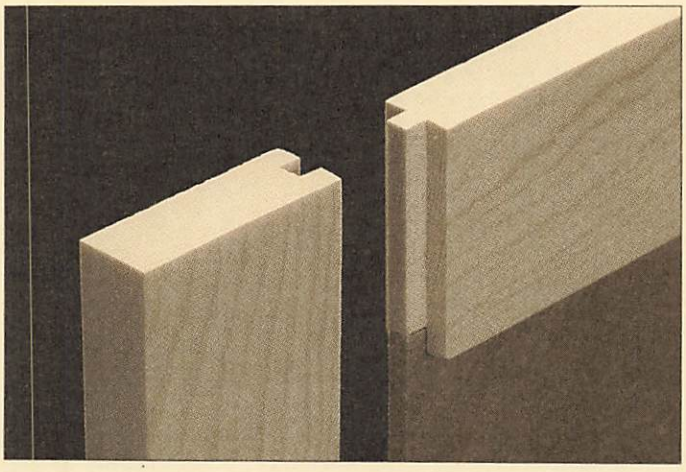

MORTISE AND TENON. On a traditional mortise and tenon joint, the long tenon and deep mortise provide strength for the frame, see Fig. 1. So, in a frame and panel unit built with mortise and tenon joints, the strength in the unit comes from the joint itself.

STUB TENON AND GROOVE

A stub tenon and groove joint is a little different from a traditional mortise and tenon. The stub tenon and groove joint doesn't have a "true" mortise. Instead, the groove that holds the panel also houses the short tenon, see Fig. 2. (Also see pages 14 and 15 for more on the groove and stub tenon.)

But the most important difference between the two joints has nothing to do with the tenon or the mortise. It's that a stub tenon and groove joint has a panel that's *glued* in place.

GLUED-IN PANEL? Wait a minute. I thought you weren't supposed to glue panels into frames. Doesn't the panel have to "float" so it can expand and contract with changes in humidity? Yes — *if* the panel is solid wood.

And that's one of the main things to understand about this joint. It's usually used with a plywood panel that won't expand or contract — so the panel *can be* glued into the groove.

UNIT STRENGTH. When it's glued into the groove, a panel becomes part of the joint. In fact, a frame with stub tenons and grooves gets most of its strength from the inner panel, not from the outer frame and joints. It's like the difference between a lobster and a fish — one gets its support from an outside shell, the other from an internal skeleton.

A glued-in panel helps tie the frame pieces together so the corner joints don't need to carry all the weight. This means the tenon can be "stubby"; it only has to be as long as the groove is deep, see Fig. 2.

STUB TENON. If the glued-in panel ties the frame together, why do you even need the stub tenon? Two reasons. The most important reason is the stub tenon keeps the rail (the horizontal frame piece) and stile (vertical piece) aligned and flush. Then the rail can't twist in relation to the stile. Secondly, the stub tenon fills the end of the groove.

GLUE SURFACE. Is a stub tenon and groove joint really as strong as a mortise and tenon? No, the joint itself isn't as strong. But once the panel is glued into the groove, the whole unit is stronger. That's because of the increased glue surface. When a panel is glued into a frame, the glue extends all the way around the inside of the frame (the length of all four grooves). The glue isn't concentrated just at the corner joints like in a mortise-and-tenoned frame with a floating panel, see shaded areas in Figs. 1 and 2.

Also, modern glues are a lot stronger, and their holding power greater than glues available in the past. So when a piece of plywood (or other man-made wood substitute) is glued into a frame, the entire unit becomes very strong. Probably as strong as one solid piece of wood, but without the problems of wood movement.

GLUING AND ASSEMBLY

Okay, so it's the glued-in panel that makes the stub tenon and groove joint work so well. What's the big deal about gluing a plywood panel into a grooved frame? It isn't a big deal, as long as you keep in mind the technique works because the glue *bonds* the frame to the panel as a unit. The secret to this bond is an unbroken (continuous) glue line.

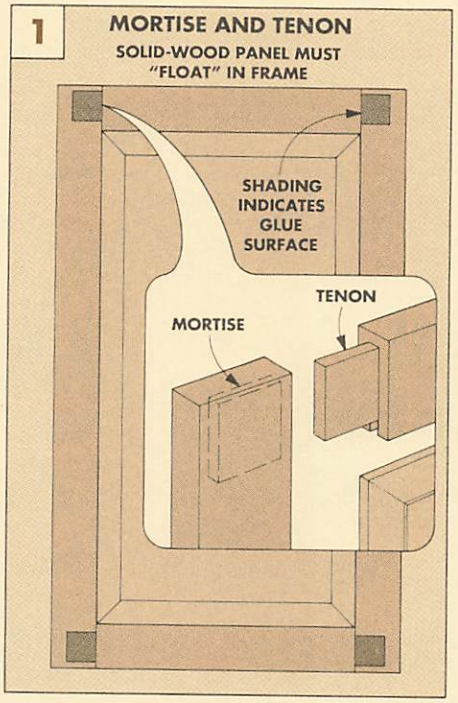

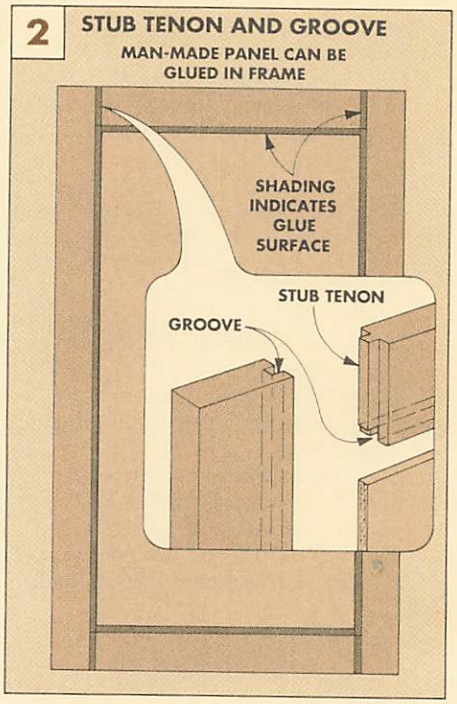

DRY ASSEMBLE & GLUE. For the frame and panel to fit together properly as a unit, dry assemble and check the unit for tight joints and square corners before doing any gluing.

Then, to glue up the assembly, spread glue into the grooves of the rails, see Fig. 1a. Now place the rails onto the ends of the panel, see Fig. 1.

Next, spread glue on each tenon, and also into the grooves of the two stiles, see Fig. 1b. Finally, slip these two pieces onto the panel.

CLAMP. With the frame sections glued around the panel, clamp across the joints at both ends. Then, to keep the stiles from bowing out, place another clamp across the middle of the frame between the first two, see Fig. 2. Tighten this middle clamp until the width of the panel measures the same here as it does at the ends.

Shop Note: To keep the sides of the frame from twisting, the clamping pressure should be *centered* on the joints. It helps to use a spacer under each frame side, see Fig. 2a. Or you can place a rounded-over block between the clamp and the frame, see Fig. 2b.

EFFICIENCY

Besides being strong, stub tenon and groove joinery is also a quick and efficient way to build a frame and panel unit. After you've cut the grooves and tenons, that's all there is to it. You don't have to cut out a deep mortise.

Plus, both parts of the joint can be cut with just one tool. I usually use a table saw, but you could use a radial arm saw or router.

On pages 14 and 15 we show how to cut stub tenons and grooves using a table saw. Also, shown on page 17 is a jig for cutting tenons with a router.

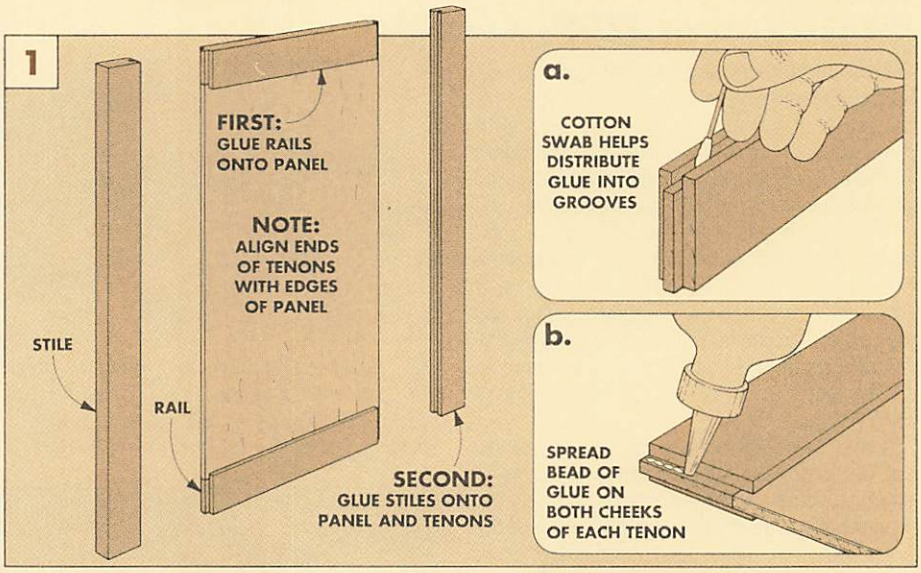

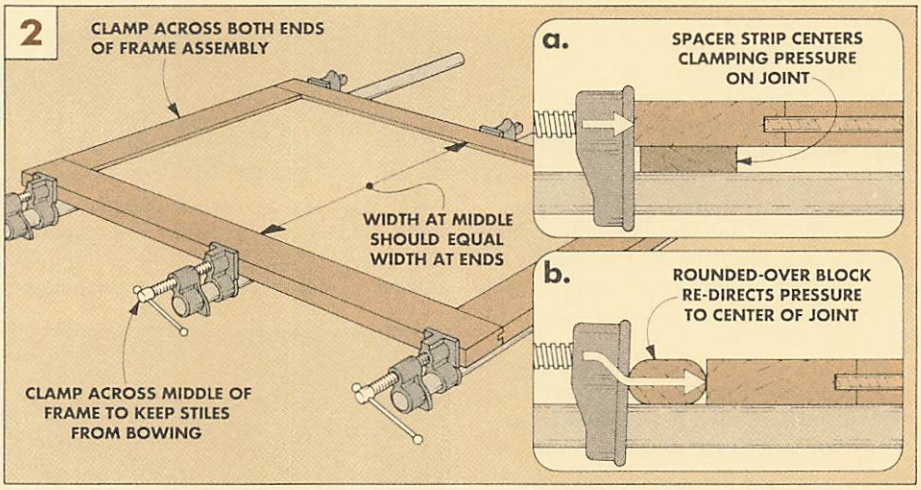

DIFFERENT TREATMENTS

The File Cabinet and Shop Cabinet shown in this issue have ¼" panels in a solid wood frame. The frames for these were kept simple with squared-off edges. But with a different treatment to the frame or the panel you can get a more finished look.

DECORATIVE EDGES. As shown in the first drawing below, a molding strip can be added around the inside of the frame. The next two drawings show the effect when a decorative edge is routed on the frame.

DIFFERENT PANELS. There's no reason the panel has to be the same thickness as the groove. A ¾"-thick panel with a centered tongue (on the left in the last drawing) would be flush on both faces of the frame. A rabbet cut on a ½"-thick panel (at right) offsets the panel toward one face.

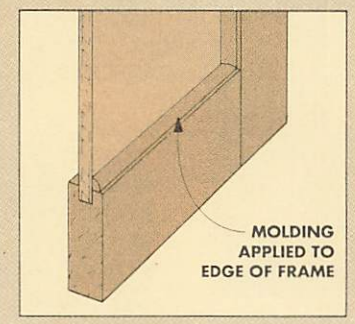

• *Apply a strip of molding to produce a smoother transition between the frame and panel.*

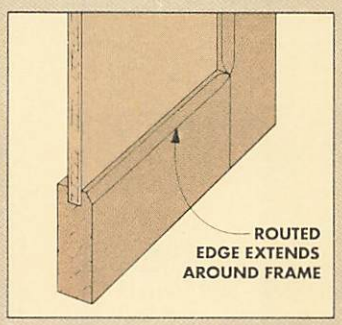

• *Rout a profile around the frame to achieve a visual transition and a more finished look.*

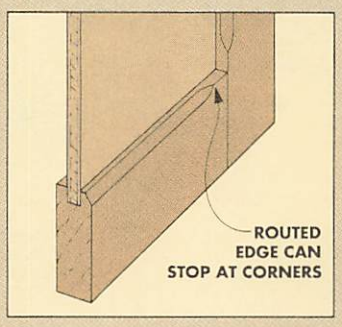

• *A "stopped" chamfer also gives the frame and panel unit a more formal appearance.*

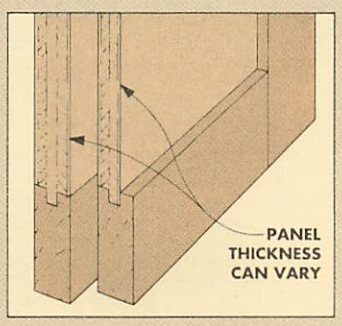

• *Install the panel flush to both, or just one face of the frame to give the unit still another look.*

GROOVES — STEP-BY-STEP

When building a frame and panel project using stub tenon and groove joints, the thickness of the panel is the key. So the first step is to determine the actual thickness of the panel (¼"-thick plywood, particularly hardwood plywood, may actually be *less* than ¼" thick).

The thickness of the panel determines the width of the grooves — and the thickness of the tenons that will fit in the grooves. So, if I'm building a series of frames using the same panel material, I'll cut the joints in production fashion. First I'll cut the grooves to fit the panels, then I'll cut the tenons to match the grooves.

TABLE SAW. There are a number of ways to cut the grooves, but I usually use the table saw and a carbide-tipped combination blade. The table saw provides a quick way to make a straight cut. And, by moving the fence slightly, you can easily sneak up on the final width of the groove.

Start by checking that the blade is set 90° to the table. Then adjust the height of the blade to cut the groove slightly (1/16") deeper than the desired length of the tenons. This helps ensure that the tenons won't bottom out in the grooves, and that the frames will pull together tightly during final glue-up.

TEST PIECE. One problem with cutting grooves is getting the groove exactly the right size and centered on the thickness of the workpiece. A trick I use is to cut the groove on a test piece first.

DOUBLE PASS. Another trick to getting the groove centered is to make a double pass without moving the rip fence. Make one pass over the blade to cut half the groove, see Step 2. Then flip the piece end-for-end and make a second cut with the opposite face against the fence, see Step 3.

TEST THE FIT. Now, check this test groove against the material to be used for the panel. If the groove is not wide enough to produce a "friction fit," you'll have to move the fence slightly and repeat the process. This way, you sneak up on the perfect fit — when the panel slides in the groove but doesn't fall out.

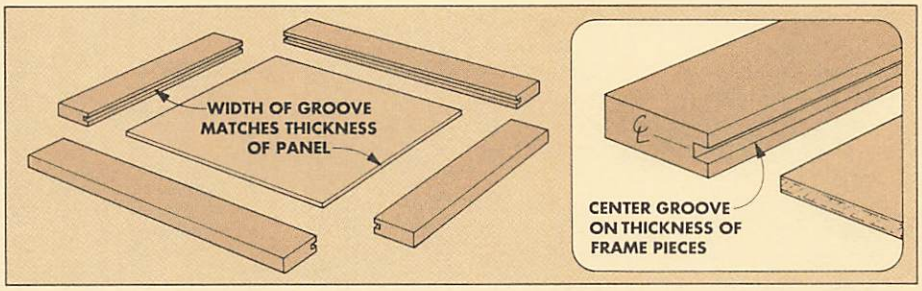

1 *First cut all frame pieces to their finished dimensions. (Allow for the tenons when cutting the rails to length.) Opposing pieces — the horizontal rails and the vertical stiles — must be the same length or the corners won't be square. For accurate repetitive cuts, begin with a test piece. Mark a centerline on the end of this test piece.*

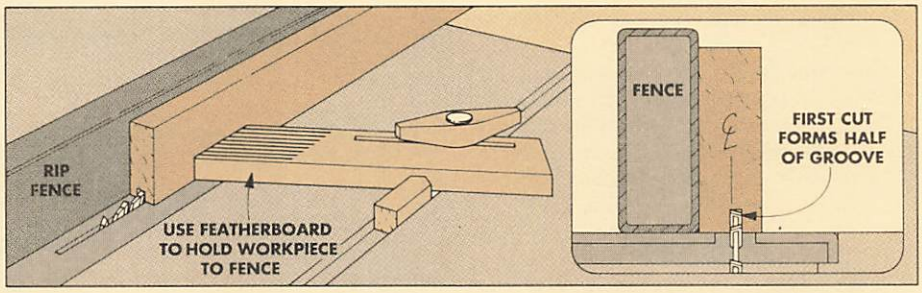

2 *Now set the blade height to the desired groove depth. Then position the test piece so it's slightly off-center of the reference line. Lock the rip fence in place so it's tight against the workpiece. Use a featherboard to hold the workpiece to the fence. Now make a first pass over the blade, holding the test piece down tight to the table.*

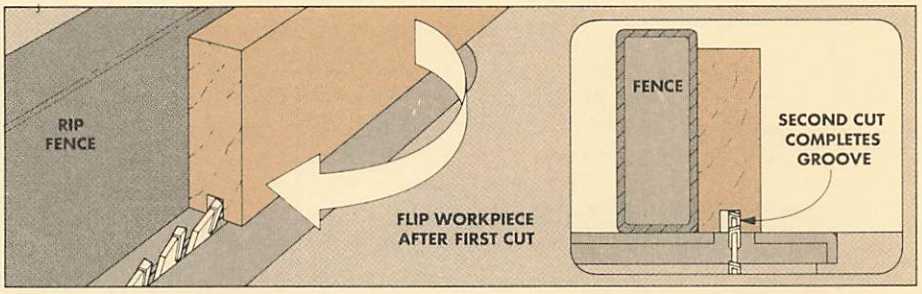

3 *After making the first pass, flip the piece end-for-end and make a second pass. Now check if the panel fits in this groove. If the panel doesn't fit properly, adjust the fence and make two more passes over the blade. Once the panel fits snugly in the groove of the test piece, all the frame pieces can be grooved.*

TIPS AND TROUBLESHOOTING

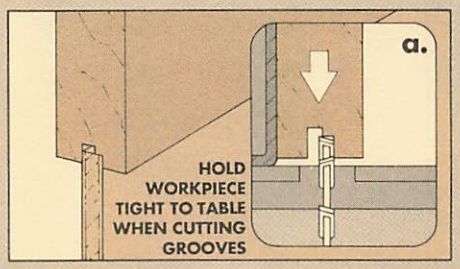

• *Keep uniform pressure on the workpiece throughout the length of the cut. ("Stair-step" grooves keep a panel from seating properly.)*

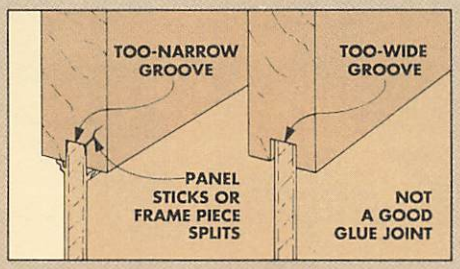

• *Assembly is difficult (the frame may even split) if the groove is too narrow. Too wide a groove results in a poor glue joint.*

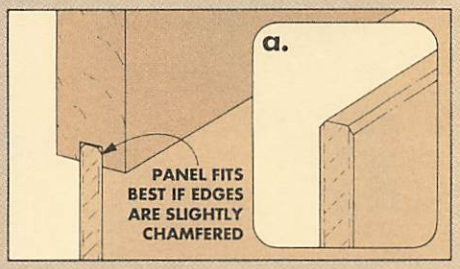

• *The panel will slide easily into the groove if you chamfer its edges. Use a sanding block or hand plane to make a slight chamfer.*

STUB TENONS — STEP-BY-STEP

After the grooves are cut in all the pieces, the stub tenons have to be cut to fit the grooves. Typically, the stub tenons are centered on the thickness of the workpiece and cut slightly (1/16") shorter than the depth of the groove.

SET UP SAW. I cut the stub tenons making a series of passes using a miter gauge on the table saw. Once again I used a combination blade and made sure it was set at exactly 90°. (If it's not at 90°, the shoulders of the tenon won't fit tight against the mating piece.)

To accurately set the *height* of the blade, use one of the grooved pieces, see Step 2. This determines the thickness of the tenon.

And, to determine the *length* of the tenon, I position the rip fence as a stop, see Step 3. (Note: Since you're not cutting *through* the piece, it's okay to use the rip fence and the miter gauge together.)

The last step in setting up is to check the miter gauge with a try square. It must be 90° to the rip fence. If it's not, the tenon's shoulders won't be perpendicular to the edge of the workpiece, and the assembled frames won't be square.

TEST CUT. As in cutting the groove, the best procedure for getting the right fit when cutting the stub tenon is to work with a test piece first. The test piece has to be the same thickness as the finished workpieces.

Push the test piece up against the fence and use the miter gauge to guide it through the blade, making multiple passes until one side (cheek) is cut, see Fig. 4.

To cut the other cheek, flip the test piece over and repeat the same steps. This will ensure that the tenon is centered on the thickness of the workpiece.

TEST FIT. Now check to see how well the test tenon fits into the grooved piece. Like with the panel, there should be a friction fit. And the shoulders of the tenon should fit tight against the mating frame piece.

When you've got a test tenon that fits the groove snugly, cut the tenons on both ends of the remaining frame pieces.

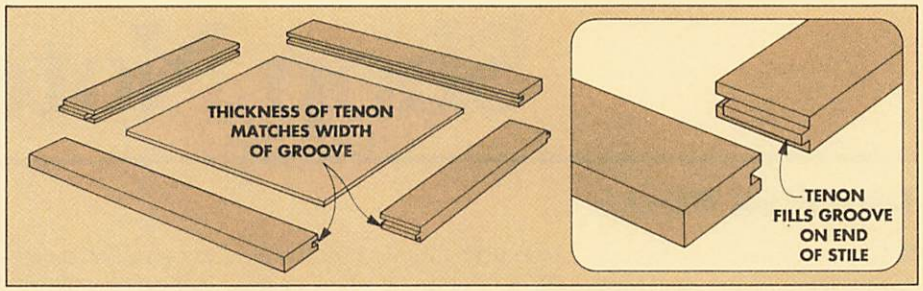

1 *Before you make any cuts, first mark the frame sections needing tenons. Note: There are four tenons, but they're cut on the ends of just two pieces. For the tenons to fit properly they must be the same thickness as the panel (as thick as the groove is wide). To ensure a proper fit, first cut a test tenon on a piece of scrap.*

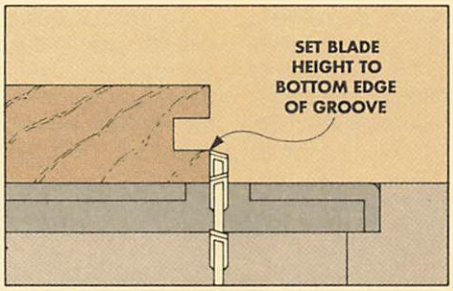

2 *Use the grooved piece to set up the saw for the tenons. Lay the piece on the table and raise the blade so the tips extend to the lower edge of the groove.*

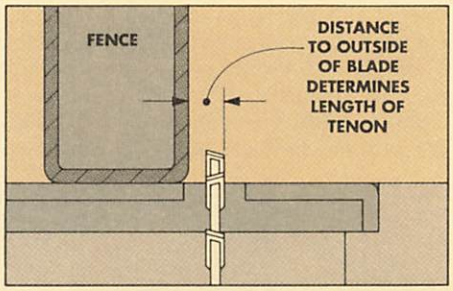

3 *Now move the fence until the distance between the fence and the outside edge of the blade equals the desired length of the tenon.*

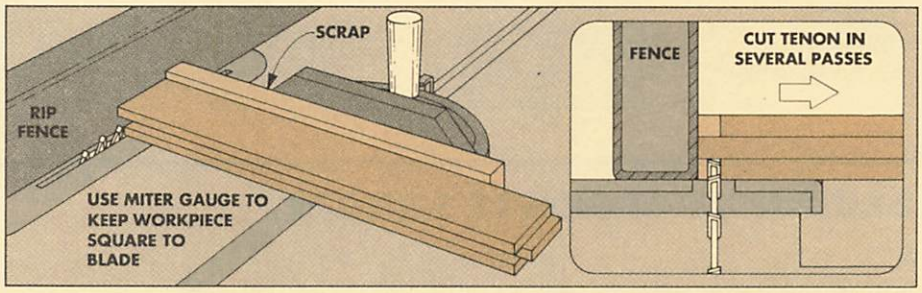

4 *With a test piece butted to the fence, use the miter gauge and make a pass over the blade. Then back the piece away from the fence and make successive cuts. Turn the piece over and repeat the process to complete the tenon. Test fit the tenon in the grooved workpiece. If needed, raise the blade and re-cut the tenon for a friction fit.*

TIPS AND TROUBLESHOOTING

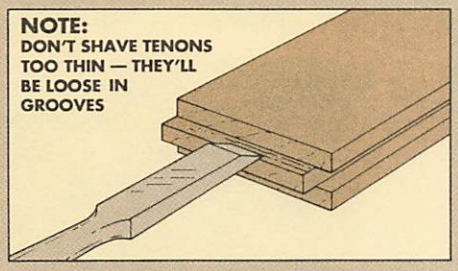

• *The blade will leave ridges on the faces of the tenons. If the ridges prevent a good fit, carefully shave them off with a sharp chisel.*

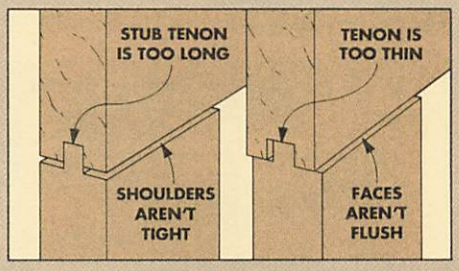

• *If the tenon is too long or too thin, the frame pieces won't join well. Avoid this by cutting the tenon on a test piece first.*

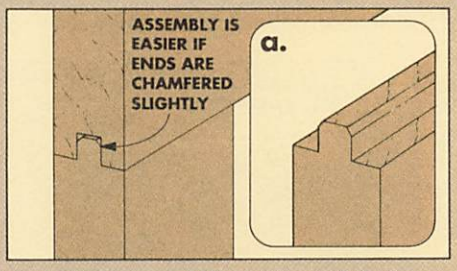

• *A slight gap at the bottom of the tenon lets the shoulders pull up tightly to the mating pieces. Chamfered ends ease the fit.*

Shop Notes

DRAWER PULLS

■ You could use store bought drawer pulls for the Shop Cabinets shown on page 18, but it's a lot more fun (and less costly) to make them from leftover scrap, see Fig. 1.

To safely make the pulls, I started with long strips and then cut each one to finished length. To do this, rip several pieces of ¾"-thick scrap to a width of 1".

ROUT STRIPS. Then, rout a finger grip on the back edges of each strip. I used a router table and a ¼" cove bit set for a ½"-deep cut, see Fig. 2. (Or you could use a ½" core box bit.) Next, turn the strips over and round over the front edges with a ¼" round-over bit, see Fig. 2.

CUT PULLS. Now the pulls can be cut to length. The pulls I made are 4" long, but they can be longer or shorter as needed.

ROUND OVER ENDS. After cutting the pulls to length, I wanted to rout a ¼" round-over on the ends of the pulls. But there is a problem when the ends are routed. They have a tendency to slip into the opening in the router table fence and cause the bit to gouge the workpiece.

To prevent this, you can reduce the size of the opening by clamping an auxiliary fence to the regular fence, see Fig. 3. I cut the auxiliary fence from ¼" Masonite and cut a notch in it just slightly larger than the bit.

Then, to hold the pulls square to the router fence while routing, I used a backer board made from a piece of scrap, see Fig. 3. Note: Press *down* on the drawer pull while *pushing* the backer board to guide the pull past the bit.

DRILL HOLES. To mount the pulls with No. 8 screws, drill two 3/32" pilot holes in each pull. Center the ½"-deep holes on the width of the pull, refer to Fig. 1.

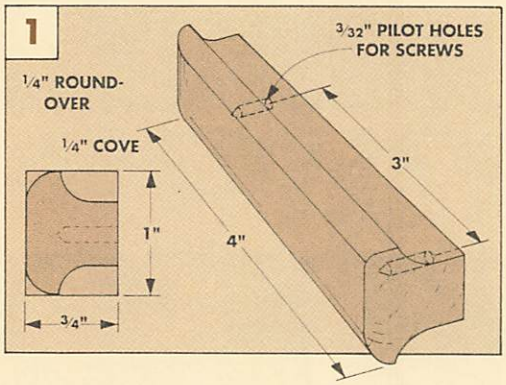

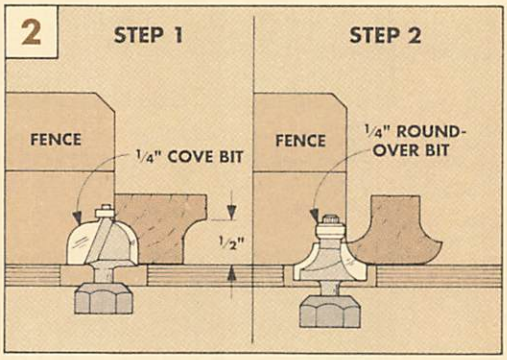

GLUING UP CABINETS SQUARE

■ Two of the projects in this issue, the File Cabinet, and the Shop Cabinets, are assembled in a similar manner. Gluing the assemblies together is a fairly simple task — but clamping the cabinets *square* can be tricky.

CHECK SIDES. Clamping a cabinet starts when you assemble the side frames — you have to make sure that they're square and flat. If the sides are square, there are a few tricks to hold the cabinet square while clamping.

POSITIONING CLAMPS. A trick that I use often to bring a cabinet into square, is what *causes* many cabinets to become out of square — the position of the clamps, see Figs. 1 and 2.

If clamps aren't positioned correctly during assembly, they can cause the cabinet to twist or rack, see Fig. 2. If you've applied the clamps correctly and the cabinet *still* isn't square, try repositioning the clamps to bring it into square, see Fig. 1.

PLYWOOD INSERT. If repositioning the clamps doesn't help, I use a plywood insert, see Fig. 3. (Note: This method is especially useful if you're making several cabinets that are the same size.)

Start by cutting a pair of plywood squares to fit in the cabinet. Then, to keep them from tilting or falling, screw a pair of cleats to each square, see Fig. 3.

To use the inserts, place one at the top and one at the bottom of the cabinet. As the clamps are tightened, the cabinet will square itself around the inserts.

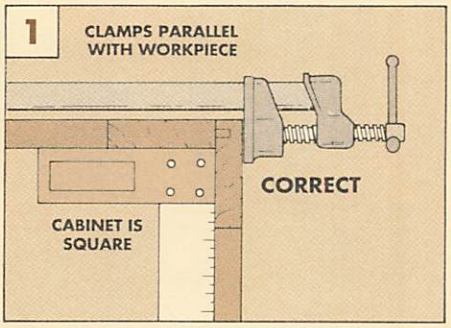

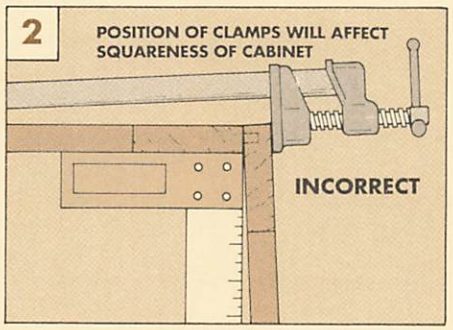

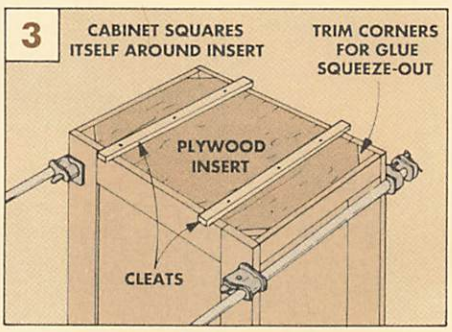

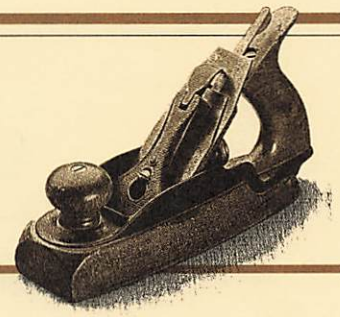

ROUTER TENON CUTTING JIG

■ Here's an alternative to cutting stub tenons on a table saw (as shown on page 15). For this method, you'll need a router, a ½" or ¾"-diameter straight bit, and the shop-built jig shown here, see Fig. 1. And once the jig is built, it can be used to cut longer tenons and half laps, too.

The jig holds the workpiece securely and guides the router for a perfect 90° cut. The stop block assures that the tenon's shoulders are properly aligned.

ADVANTAGES. One advantage to using this jig is your router will cut a much smoother tenon than your saw or dado blade. This will make fitting and assembling the joints easier. Another advantage is that the straight bit will cut square shoulders, so you're assured of a tight fit.

MAKING THE JIG. I built the jig to cut tenons on ¾"-thick stock. (Note: This is one of the limitations of the jig. To cut tenons on thicker or thinner stock, you'd have to make a new jig, or replace the fence and stop block.)

The jig is made up of four pieces: a base of ¾" plywood, a fence, a hold-down arm, and a stop block, all made from ¾"-thick stock, see Fig. 1.

To build the jig, start by screwing the fence to the base, see Fig. 1. Then, cut the 3"-wide hold-down arm to length.

Next, clamp the arm 8" from the end of the jig so it's square to the fence. Then screw it down to the fence, see Fig. 1.

To hold the workpiece in place, drill a hole through the arm and the base for a carriage bolt, see Fig. 1a. The bolt extends up through the base and arm, and a wing nut on top tightens the arm down to pinch the workpiece in the jig.

STOP BLOCK. For a stop block, use a piece of scrap that's the same thickness or a little thinner than the fence.

REFERENCE DADO. To provide a point for aligning the workpiece in the jig, rout a ⅜"-deep reference dado across the fence, see Fig. 2. Use the same router and bit that you'll use to cut the tenons. (Note: The collet on a router can be out of center in relation to the base plate. To avoid problems with shoulder alignment, hold the router the same way each time you rout a tenon.)

USING THE JIG. To cut a tenon, start by marking the location of the shoulder on a test piece.

Then slide the piece under the arm and align the mark with the left edge of the dado in the fence, see Fig. 3. Now tighten the wing nut to hold the test piece in place. And then move the stop up against the test piece and clamp it, see Fig. 3.

Next, set your router bit to slightly less than the depth of the shoulder, and make a test cut. To do this, hold the edge of the router base against the right side of the arm. Rout across the end of the workpiece and all the way through the fence, see Fig. 4. (This first cut may remove the corner of the stop block.)

Next, loosen the wing nut, flip the piece over, and cut the other side of the tenon. Then check the fit in the mortise. If it doesn't fit, increase the depth of cut, sneaking up on the final depth. (Note: To keep the tenon centered, always rout both faces of the workpiece after changing the depth of cut.)

LONG TENONS AND HALF LAPS. Longer tenons and end half laps joints are routed much like the stub tenons. But these joints will take a number of passes.

Align the workpiece in the jig and set the stop. Then, back the workpiece away from the stop and make the first pass on the end of the piece. After each pass, move the piece closer to the stop. The last pass is made when the end of the workpiece touches the stop.

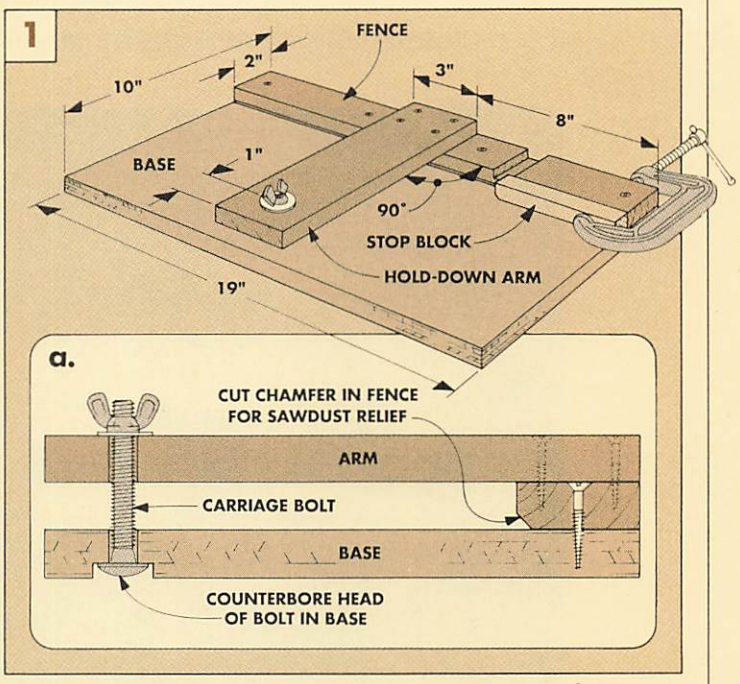

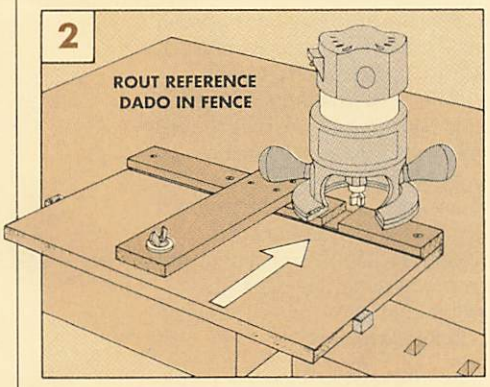

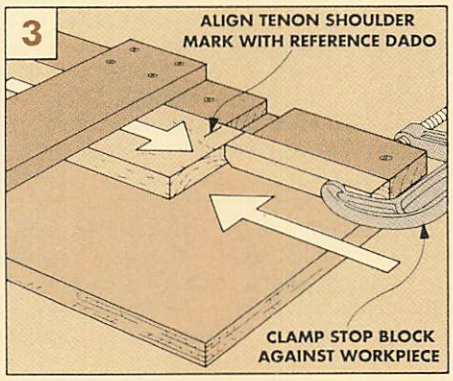

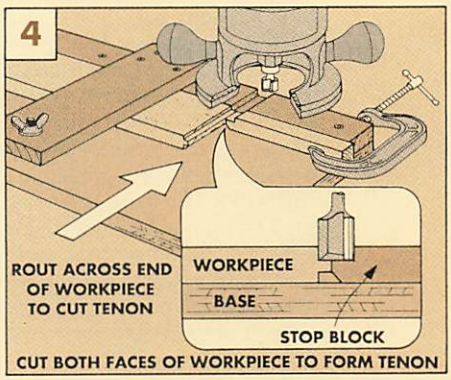

Shop Cabinets

Customize these cabinets with any combination of drawers and doors to fit the needs of your shop. You can even build several cabinets and join them together with a bench top.

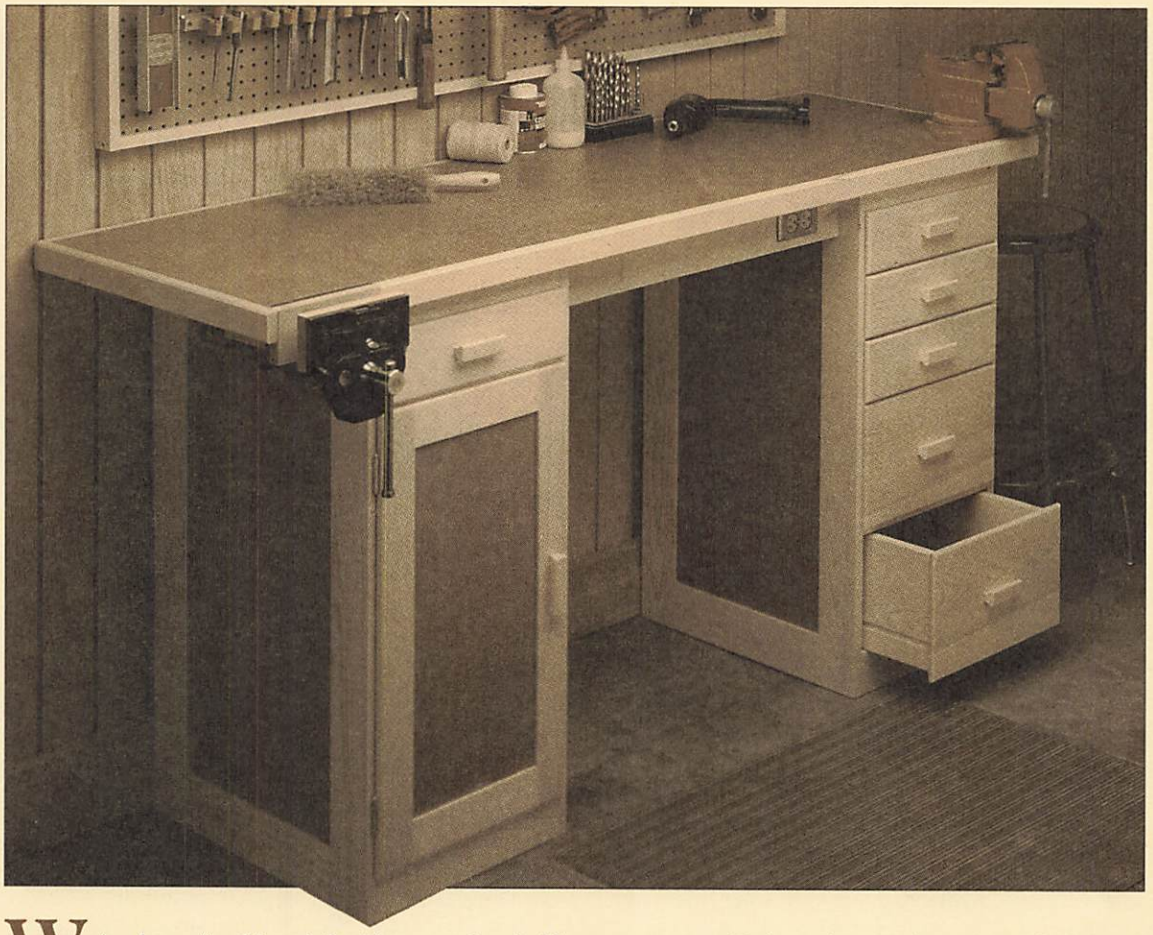

We've been "making do" with a couple of old storage cabinets in the *Woodsmith* shop for several years. Finally, I decided it was time to do something about it.

The new cabinets had to meet three requirements: first, they had to be simple to build and easy to assemble. Second, they should be relatively inexpensive. And third, it should be easy to *customize* the cabinets to fit different needs. (You can build as many as you need, and use different drawers and door configurations.)

JOINERY. The basic cabinet is built using a frame and panel technique. A wood frame is joined together and holds a plywood or Masonite panel. The frames are joined with a stub tenon and groove — a simple joint to make, and one that's easy to set up for making multiple joints. (For more information, see pages 12 to 15.)

MATERIALS. To keep the cost down, I used ¾" pine to make the frames and ¼"-thick Masonite for the panels and the drawer bottoms. The door frames and drawers are also made from pine. And the drawers slide on wood runners (you can use metal drawer slides if you prefer). Even the pulls are made from pieces of scrap wood.

FILLER STRIPS. The trickiest part about designing these cabinets was coming up with a simple way to vary the placement of the drawers and doors. I came up with a technique that uses grooves along the front stiles. The drawer rails are set in these grooves. Then the grooves are filled above and below the rails with filler strips.

TOP. After completing the cabinets, I built a plywood and Masonite top. (For other options, see page 24.)

FINISH. Finally, I applied a couple coats of tung oil finish to the completed cabinets and top.

EXPLODED VIEW

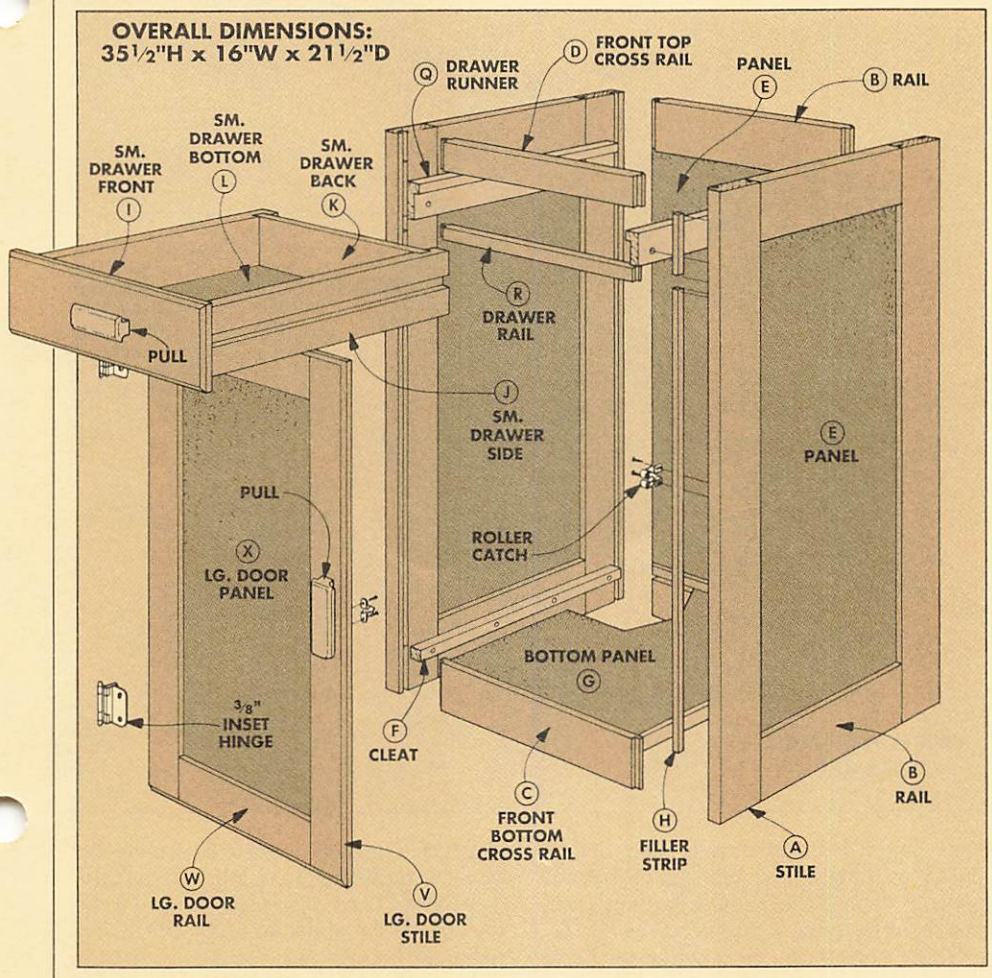

VARIATIONS

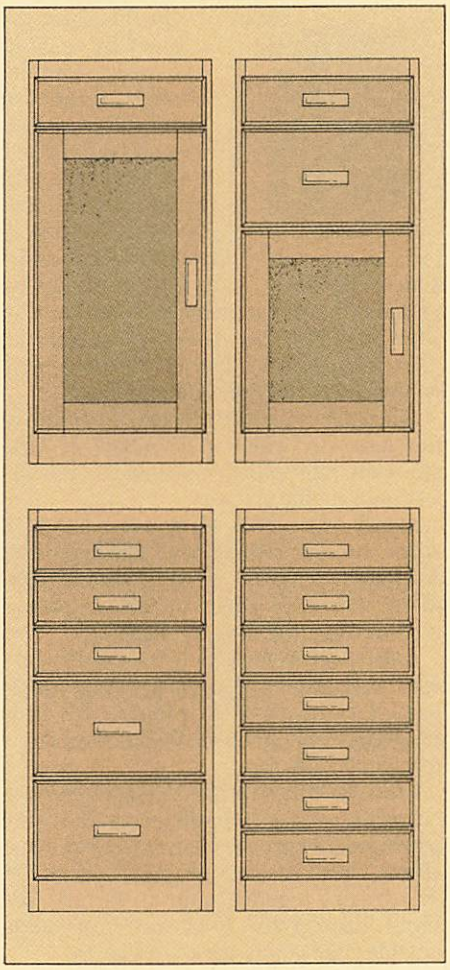

MATERIALS

WOOD PARTS

BASIC CASE		
A	Stiles (4)	¾ x 3½ - 35½
B	Rails (6)	¾ x 3½ - 15
C	Ft .Btm. Cross Rail (1)	¾ x 3 - 15
D	Ft. Top Cross Rail (1)	¾ x 1¾ - 15
E	Panels (3)*	¼ - 15 x 29
F	Cleats (2)	¾ x ¾ - 20
G	Bottom Panel (1)*	¼ -14½ x 20½
H	Filler Strips	¼ x ¼ - to fit
SMALL DRAWER		
I	Front (1)	¾ x 4¼ - 15
J	Sides (2)	¾ x 3½ - 20⅜
K	Back (1)	¾ x 3½ -12½
L	Bottom (1)*	¼ - 12½ x 19¼
LARGE DRAWER		
M	Front (1)	¾ x 8¾ - 15
N	Sides (2)	¾ x 8 - 20⅜
O	Back (1)	¾ x 8 - 12½
P	Bottom (1)*	¼ - 12½ x 19¼
Q	Runners **	¾ x 2⅛ - 20
R	Drawer Rail ***	¾ x ¾ - 15

* Pieces cut from ¼"-thick Masonite.
**Two runners per drawer.
*** One drawer rail per drawer.

SMALL DOOR		
S	Stiles (2)	¾ x 2½ - 17¾
T	Rails (2)	¾ x 2½ - 10½
U	Panel (1)*	¼ - 10½ x 13¼
LARGE DOOR		
V	Lg. Door Stiles (2)	¾ x 2½ - 26¾
W	Lg. Door Rails (2)	¾ x 2½ - 10½
X	Lg. Door Panel (1)*	¼ - 10½ x 22¼

HARDWARE

- (2) Brass plated, ⅜"-inset hinges for each door in the cabinet
- (1) Roller catch per door
- (1) Pull for each drawer and door
- (4) L-Brackets required for attaching the top to each cabinet
- Woodscrews
- Finish nails for assembling drawers

CUTTING DIAGRAM

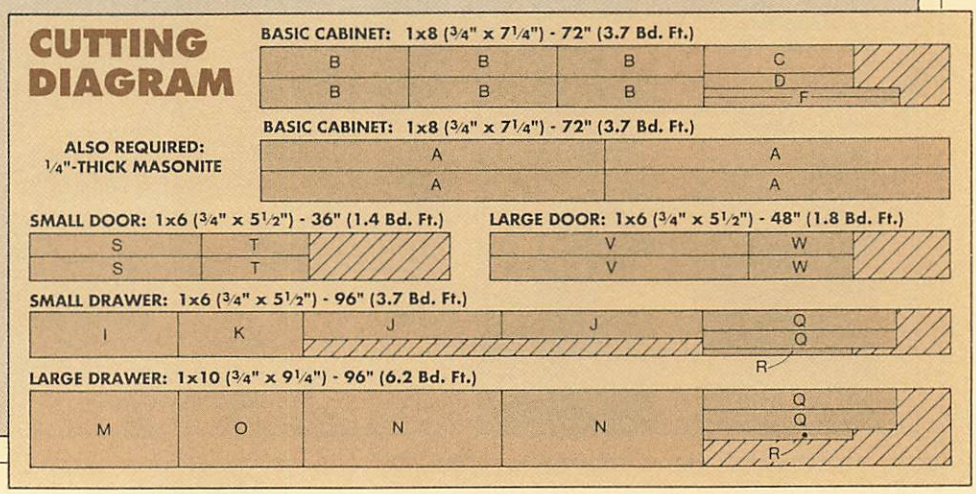

BASIC CABINET

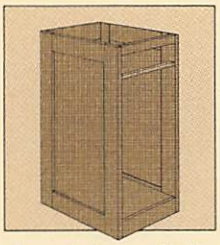

I started building the cabinet by making two side frames. Then I connected them with cross rails and a back panel, see Fig. 1. Each side frame is made from two stiles (vertical pieces), two rails (horizontal pieces), and a panel. The key to holding these frames together is the groove on the inside edge of the stiles and rails. This groove holds the panel in place and forms a "mortise" for the tenons on the ends of the rails, refer to Fig. 2.

Since the groove is the same size on all of the pieces (¼"-wide and 5/16"-deep), I cut the stiles and rails to their finished dimensions — then I cut the grooves.

STILES AND RAILS. First, using ¾"-thick stock, cut four **stiles (A)** to finished width and length, see Fig. 1. Then cut six **rails (B)**, to size. (Note: Two of these rails are used as cross rails for the back, see Fig. 1.)

GROOVES FOR PANELS. The next step is to cut the groove for the panels on the *inside edge* of all the stiles (A) and rails (B). This groove is centered on the thickness of these pieces, see Fig. 1a.

GROOVE FACE OF STILE. After grooves are cut on the edges of the stiles and rails for the panel, another groove is cut on the face of the stiles. These grooves are used to join the side frames together with cross rails, see Fig. 1. Each groove is located ¼" from the outside edge of the stiles, see Fig. 1a.

BACK BOTTOM CROSS RAIL. Now one of the *rails* (B) also needs a groove on the inside face, see Fig. 3. This rail will be used as the back bottom cross rail and the groove will hold the back edge of the bottom panel in place, see Fig. 1b.

FRONT CROSS RAILS. To hold the front of the bottom panel, I made the **front bottom cross rail (C)**, see Fig. 4. This rail is the same length as the other rails (15"), but it's only 3" wide and it has a ledge for the bottom panel to sit on. To form the ledge, cut a rabbet on the top edge of this piece, see Fig. 1c.

There's one more rail to cut for the basic shop cabinet, and that's the **front top cross rail (D)**. This rail is narrower than the other rails (1¾"-wide), but it's the same length (15"), see Fig. 1d.

CUT TENONS. Now, tenons need to be cut on the ends of *all* the rail pieces. All the tenons are the same size and are cut to fit the groove in the stiles. Note: Center all tenons on the thickness of each piece, see Fig. 2.

PANELS. The next step is to determine the size of the **panels (E)**, see Fig. 1. To do this, dry assemble one of the side frames from two stiles (A) and two rails (B), then measure the opening. To allow for the grooves, add ½" to the width and height. Then cut three panels to these dimensions, see Fig. 1. (One panel is for the back.)

ASSEMBLY. Now assembly can begin. First assemble the two side frames, see Fig. 1. Next, the basic cabinet can be assembled by adding the cross rails and the back panel. (For more information on gluing up cabinets, see Shop Notes on page 16.)

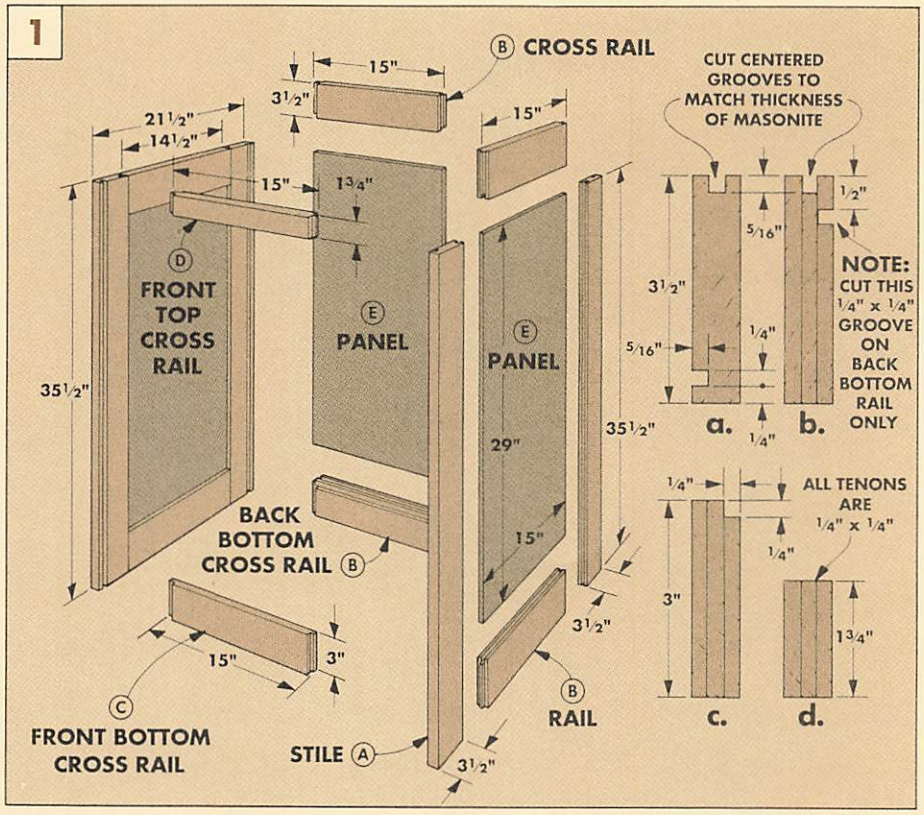

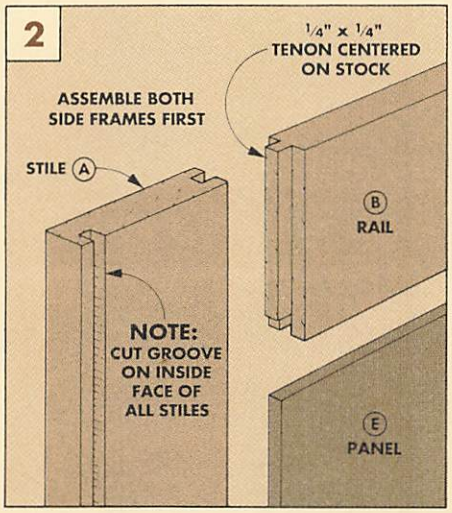

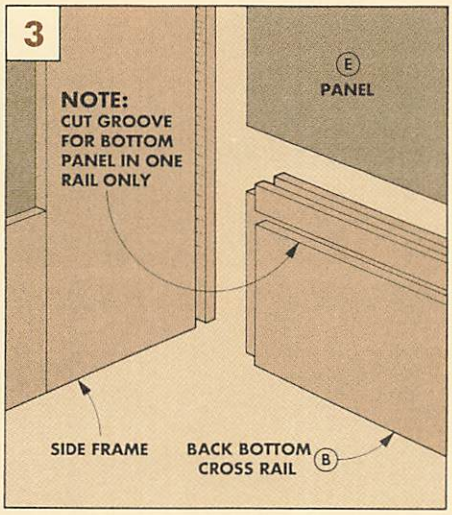

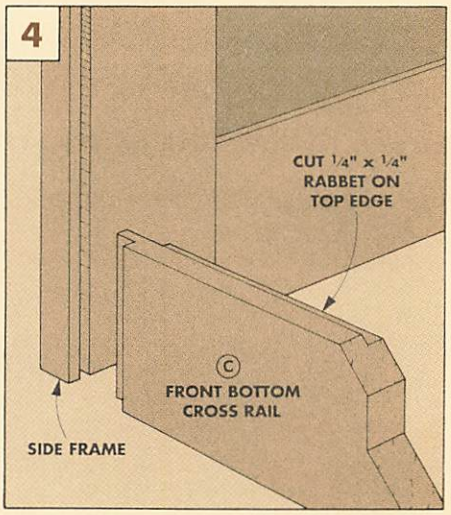

BOTTOM PANEL

After the glue is dry and the clamps are removed from the cabinet, you can begin work on the bottom panel.

I cut this panel from ¼"-thick Masonite. To keep it from sagging under the weight of heavy tools, I added support cleats to the sides of the cabinet, see Fig. 5.

CLEATS. Cut two **cleats (F)** from ¾" stock to fit between the front and back cross rails. Then screw the cleats to the side frames so they're flush with the bottom of the rabbet in the front cross rail, and flush with the bottom of the groove in the back cross rail, see Fig. 5a.

PANEL. Once the cleats are screwed in place, the **bottom panel (G)** is cut wide enough to fit between the side frames. And long enough to fit into the groove in the back cross rail and the rabbet in the front cross rail of the cabinet, see Fig. 5a.

Now, with the panel cut to size and the cleats installed, the panel can be glued in place.

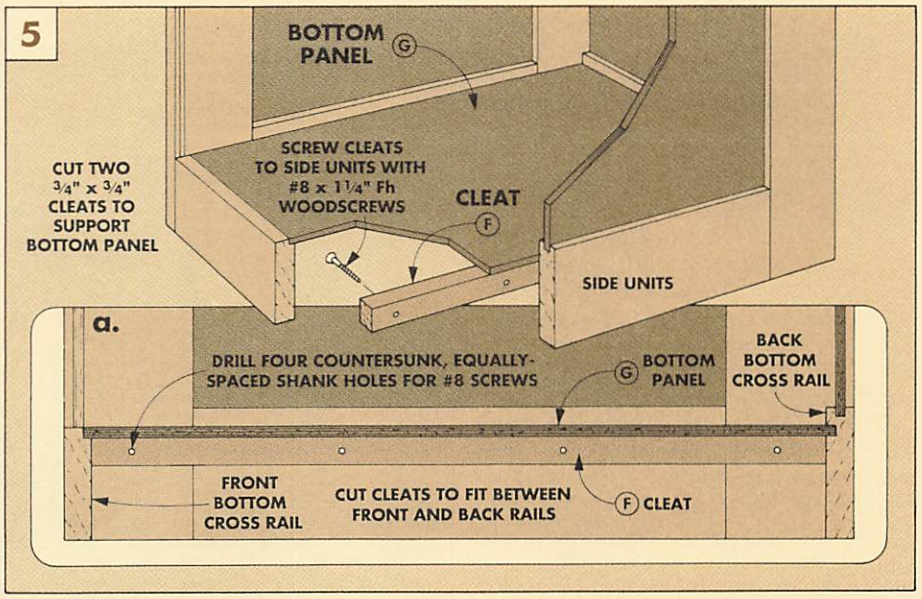

DRAWER RAILS AND FILLER STRIPS

When building a cabinet, rails are installed across the front to hold the sides together and establish the drawer opening.

Typically, the tenons on the ends of the drawer rails are set into mortises. If the cabinet has several drawers it means cutting a lot of mortises.

To make things simpler, I used a completely different technique — I set the drawer rails in a *groove*. Then to create a "mortise," I filled the grooves above and below the rail with filler strips. This way the height of the opening is determined by the length of the strips, see Fig. 6.

DRAWER RAILS. Each **drawer rail (R)** for the shop cabinet is made from ¾" square stock. The length of the rails is the same as the top and bottom rails (15" for the shop cabinet). And the tenons on the ends are the same as the other rails (¼" x ¼").

FILLER STRIPS. After completing the drawer rails, the **filler strips (H)** are cut to fit the grooves in the side of the cabinet, see Fig. 7. I found it easiest to cut these pieces in long strips that match the width and depth of the groove in the stiles. Then I cut them to length to match the desired opening height. Note: I used two different drawer sizes, and two different door sizes, see Fig. 6.

ASSEMBLY. After the filler strips are cut to length, the drawer rails and strips are glued in place. Starting at the bottom, glue a filler strip into the groove on both sides of the cabinet. Then insert a rail and glue and clamp it in place. Continue working your way up the cabinet until all of the rails and filler strips are in place, see Fig. 8.

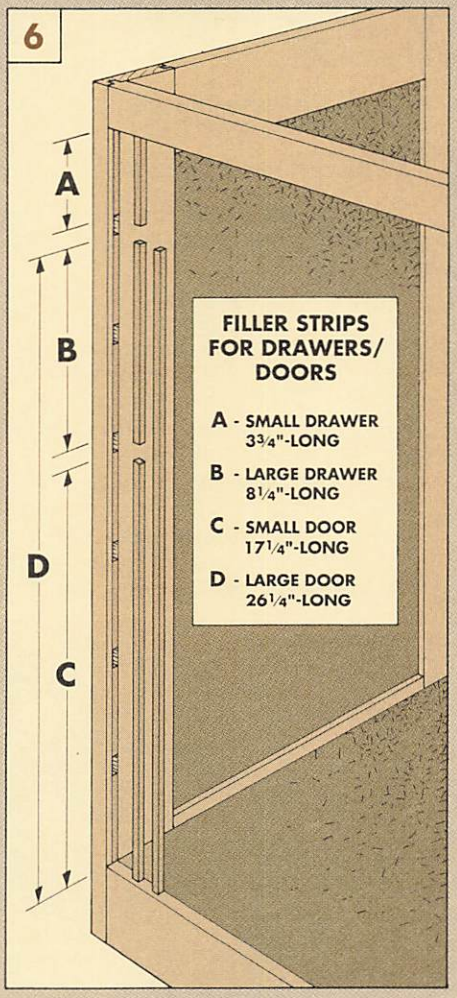

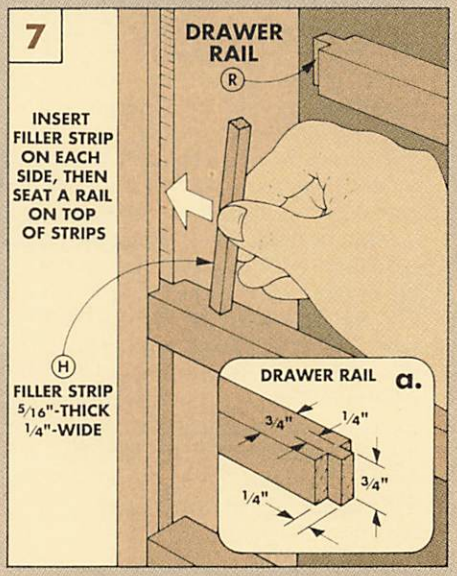

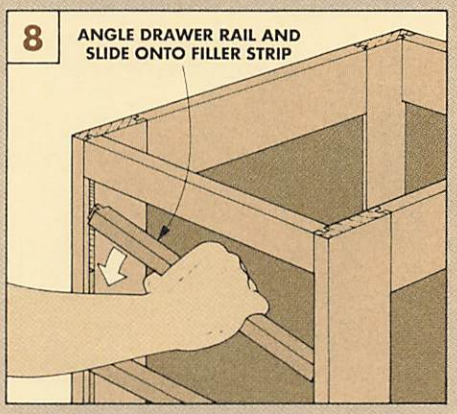

DRAWERS AND RUNNERS

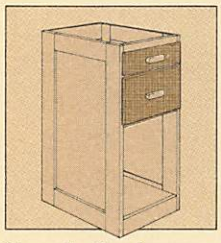

The drawers shown here have lipped fronts and the sides are simply glued and nailed in place. (Note: For other drawer joint options, see page 25.)

DRAWER FRONTS. To make the drawers, start by measuring the drawer openings. Then, to allow for the lip, cut the **drawer fronts (I or M)** ½" longer and wider than these dimensions, see Fig. 9. Note: The dimensions for both large and small drawers are shown in Fig. 9.

With the fronts cut to size, the next step is to cut a ⅜"-deep rabbet around the inside face to create a lip. However, the *width* of the rabbet varies. On the top and bottom of the drawer fronts, cut a ⅜"-wide rabbet, refer to Fig. 10. But on the ends, the rabbets are wider (1½") to allow for the thickness of the side pieces and the wood drawer runners.

Once the drawer fronts are rabbeted, rout a small decorative chamfer around the outside face of the drawer fronts, see Fig. 9b.

DRAWER SIDES. After making the fronts, the **drawer sides (J or N)** can be cut to size. The length of the sides is 20⅜". But the width of the sides is the same as the shoulder-to-shoulder dimension on the inside face of the drawer front, see Fig. 9.

Then, to provide a channel to accept the wood runners, cut a ½"-wide groove in the outside face of each drawer side, see Fig. 10.

DRAWER BACK. After cutting the grooves, cut ¼"-deep dadoes on the inside face of all the drawer sides for the ¾"-thick back, see Fig. 9a. The width of the **small drawer back (K)** and the **large drawer back (O)** is the same width as the sides, see Fig. 9. To determine the length of the drawer backs, measure the width of the inside of the drawer face from rabbeted shoulder to rabbeted shoulder. Then, to allow for the dadoes, add ½" to this dimension and cut the drawer backs to length.

BOTTOM GROOVE. Next, cut a groove in the drawer pieces for a ¼" bottom, see Fig. 9.

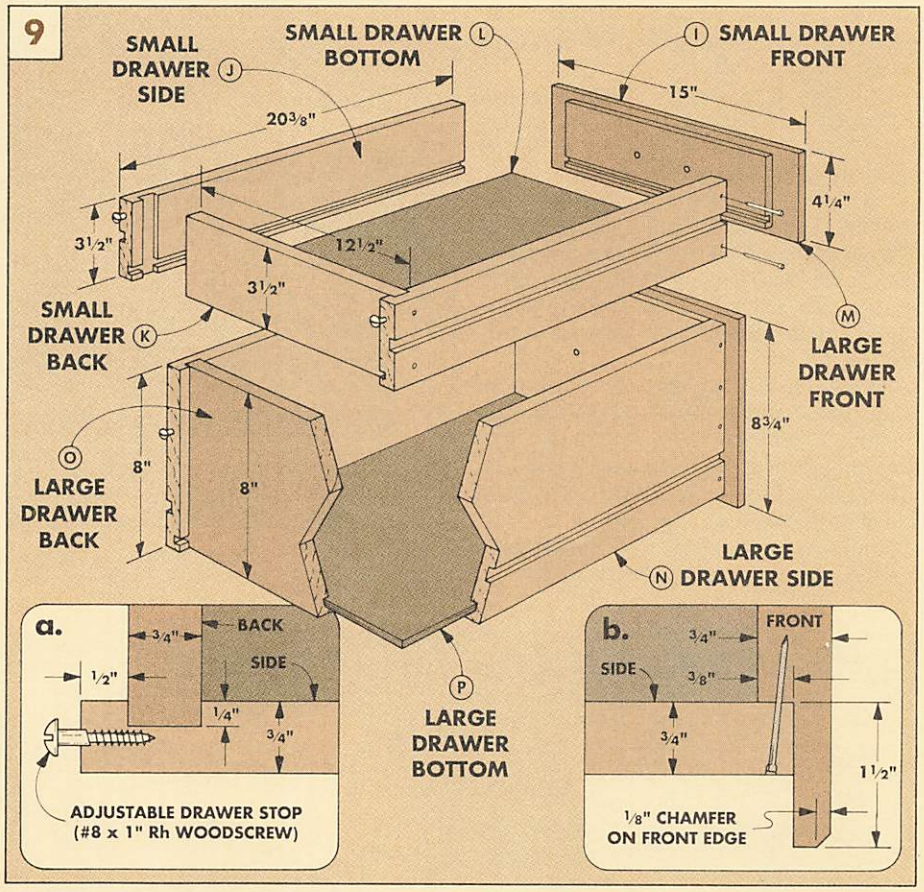

Note: On the drawer front the groove is located ¼" from the *shoulder* of the rabbet, see Fig. 10.

CUT THE BOTTOM. To determine the size of the **bottom (L or P)**, dry assemble the drawers and measure the distance between the grooves. Now cut ¼"-thick Masonite to these dimensions. Then glue and clamp the drawer pieces together. Nail the sides to the front for extra strength, see Fig. 9b.

RUNNERS. After completing the drawers, work can begin on the runners. Each L-shaped **drawer runner (Q)** is cut from a piece of ¾"-thick stock to a finished width of 2⅛" and length of 20", see Figs. 11 and 12.

ATTACH THE RUNNERS. The next step is to mount the runners to the inside of the cabinet. To do this, drill two countersunk shank holes in each runner, see Fig. 11. Then position the runner so it rests on the top of the drawer rail (½" from the front of the rail) and is parallel to the top edge of the cabinet.

With the runner in position, mark the hole locations on the stiles and drill pilot holes for No. 8 x 1" flathead woodscrews. Then screw the runner in place, see Fig. 12.

Finally, I screwed a couple of No. 8 x 1" roundhead woodscrews into the ends of each drawer side to act as adjustable stops, see Fig. 9a.

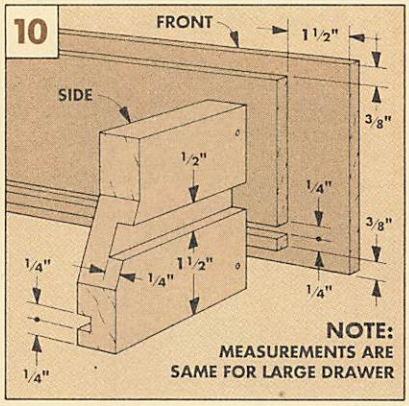

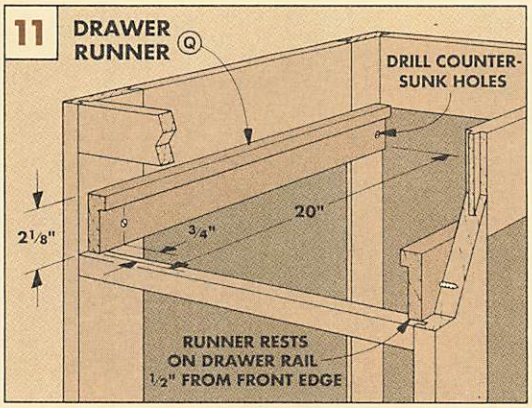

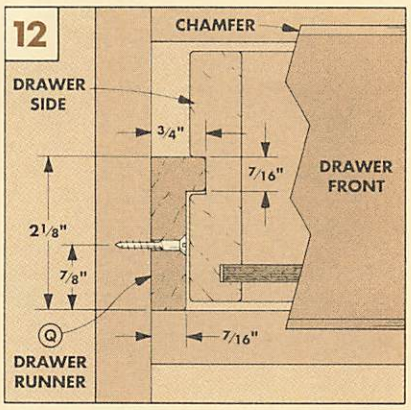

DOORS

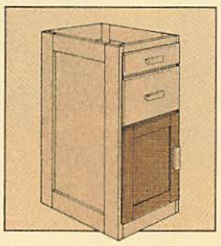

If you don't fill the cabinet with drawers, any storage space can be covered with a door. The cabinets I built use two door sizes. The finished width of each door is the same as the drawer fronts (15"). But the height of the doors will depend on the size of the opening. Here again I used ¾" stock to make the stiles and rails, and ¼" Masonite for the panels.

STILES. To determine the finished height of the doors, add ½" (for the lips) to the height of the door opening, see Fig. 13. Now, cut two 2½"-wide **stiles (V or S)** to match this measurement.

RAILS. After cutting the stiles to length, the next step is to make the **rails (W or T)**. First, cut two rails 2½" wide. To determine the length of the rails, take the finished width of the door (15") and subtract the width of both stiles (5"). Then, to allow for tenons on the ends of the rails, add ½", see Fig. 13.

CUT THE GROOVE. Once the rails are cut to length, cut a groove on the inside edge of the stiles and rails. This groove is centered on the thickness of the pieces and cut to match the thickness of the panel, see Fig. 14a. Next, tenons are cut on the ends of the rails to fit the grooves in the stiles, see Fig. 14.

PANEL ASSEMBLY. Having completed the tenons, the **door panel (X or U)** can be cut to size. To do this, dry assemble the door frame and measure the opening. Then add ½" to the length and width, see Fig. 13. Now cut the panel to these dimensions and glue up the pieces to make the door.

To form the door lip, rout a ⅜" x ⅜" rabbet around the *inside* face, see Fig. 15. Then rout a chamfer around the *outside* face, see Fig. 15a.

MOUNT THE DOOR. Once the doors are finished, I attached them to the cabinet with semi-concealed ⅜" inset hinges. To do this, position each hinge 1⅝" from the shoulders on the top and bottom edges of the door. Then, mark and drill pilot holes before screwing the hinge to the door, see Fig. 16.

Now, center the door in the opening and mark the hinge hole locations on the inside face of the cabinet, see Fig. 16. Then drill pilot holes at the marked locations and screw the hinges to the cabinet.

PULLS. Next, I made wood pulls and attached them to the drawers and doors. (For more information, see page 16.) The door pulls are centered on the width and length of the stile, see Fig. 17. And the drawer pull is simply centered on the face of the drawer.

Finally, to hold the door closed, mount a roller catch inside the cabinet directly behind the pull, see Fig. 17.

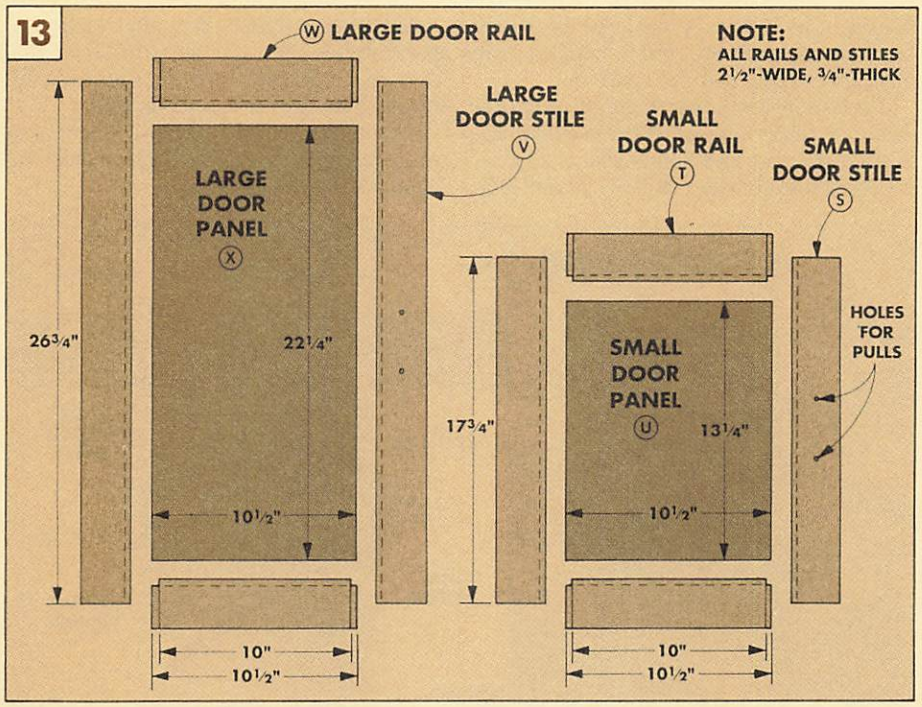

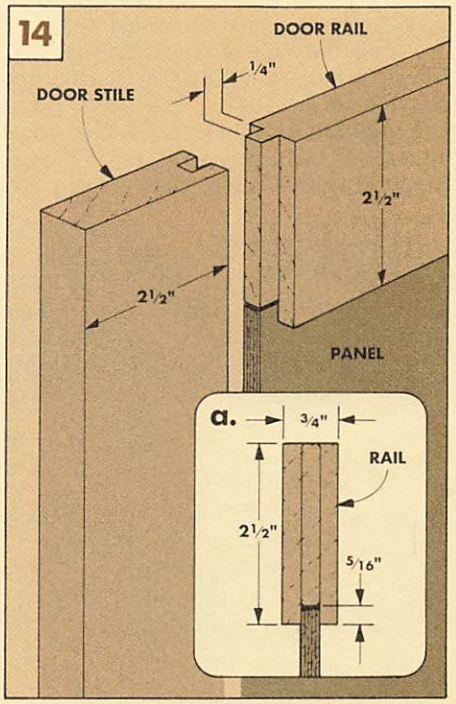

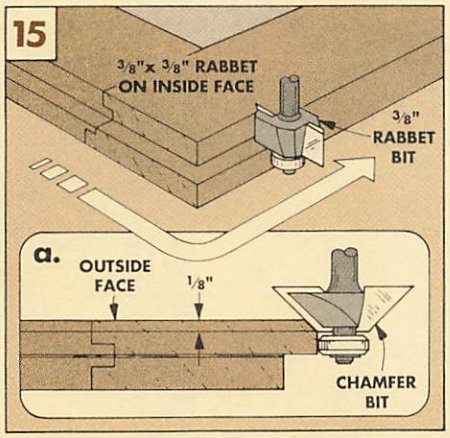

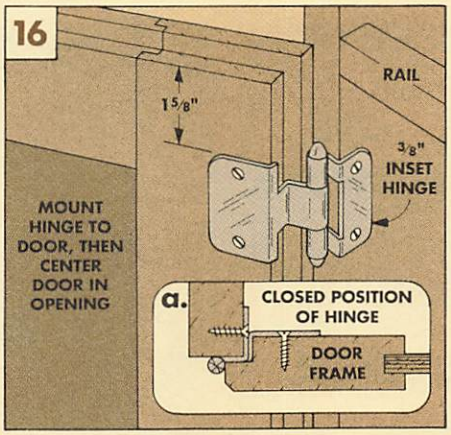

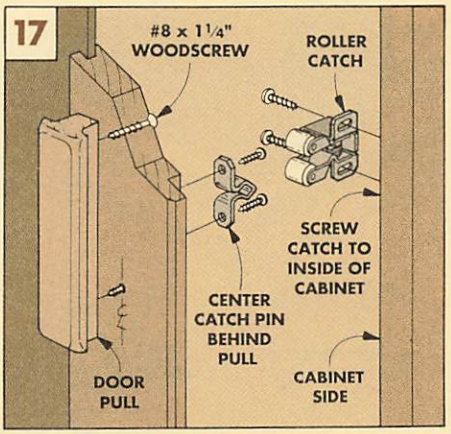

BENCH TOPS

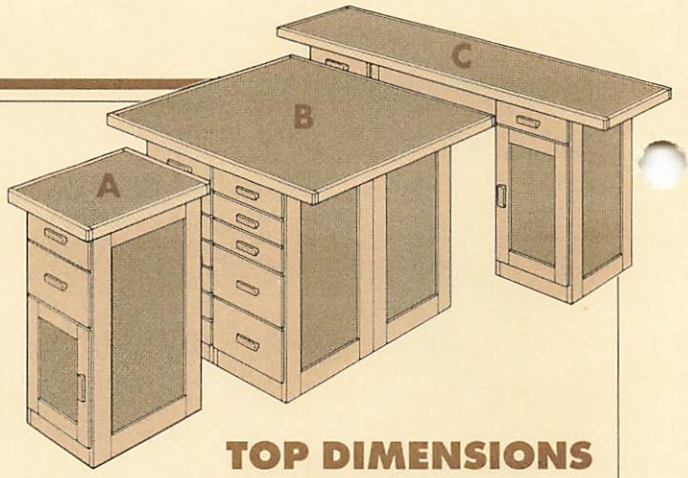

After completing the shop cabinets, I added a top to turn the cabinet (or a few cabinets) into a workbench. There are a variety of ways to arrange the cabinets. Three options are shown at the right, but the size of the bench top can be changed to fit your needs.

SUPPORT FRAME. If you plan to mount a top over two cabinets with an open space between them (as shown in the photo on page 18), you'll want to add a support frame between the cabinets, see Fig. 18. To do this, I used two ¾"-thick stretchers that fit between the cabinets, and two 1½"-thick end members to connect the stretchers.

STRETCHERS. To make the frame, determine how much space you want between the cabinets. (I have a 30" opening.) Then cut two stretchers to this length, see Fig. 20.

The stretchers are joined to the end members with a rabbet and dado joint, see Fig. 18a. When cutting this joint, I positioned the dado so the end member would be set in 1/16" from the ends of the stretchers. This allows the frame to pull tight against the cabinet, refer to Fig. 18a.

END MEMBERS. After cutting dadoes in the stretchers, cut the end members 18½" long. Then rabbet the ends to fit the dadoes, see Fig. 18a. Finally, glue and nail the frame together.

ATTACH THE FRAME. To attach the frame between the cabinets, align the frame flush to the back of the cabinets and temporarily clamp it in place. Then drill holes for hexhead machine bolts, and bolt the cabinets and frame together, see Fig. 18a.

THE TOP. After the frame is attached, work can begin on the top. I made the top from two pieces of ¾" plywood (or particleboard) and a piece of ¼" Masonite, see Fig. 19. Then I covered the edges with ¾"-thick pine trim, see Fig. 20.

If you're building a small top, these pieces can be glued and screwed together, then trim the edges to final size on a table saw. However, if you're making a large top, it may be too heavy and awkward to handle easily as you try to trim it on the table saw.

The simplest solution to get the edges of all three pieces aligned flush is to cut the bottom piece of plywood to final size first. Next, cut the other pieces *oversize*, and glue and screw them on the bottom piece. Then use a router and a flush trim bit to cut the edges of all pieces flush, see Fig. 19a.

(Shop Note: When cutting the bottom piece of plywood to size, don't forget to allow for the ¾"-thick trim.)

TRIM AND BRACKETS. To complete the top, glue and nail the trim pieces to the edges. Then rout a chamfer on the corners and the top and bottom edges, see Fig. 20a.

Finally, I screwed L-shaped brackets to the inside corners of each cabinet to hold the top in place, see Fig. 20.

TOP DIMENSIONS

A. SINGLE UNIT	24 x 20
B. QUAD UNIT	48 x 48
C. TWIN UNIT	24 x 78

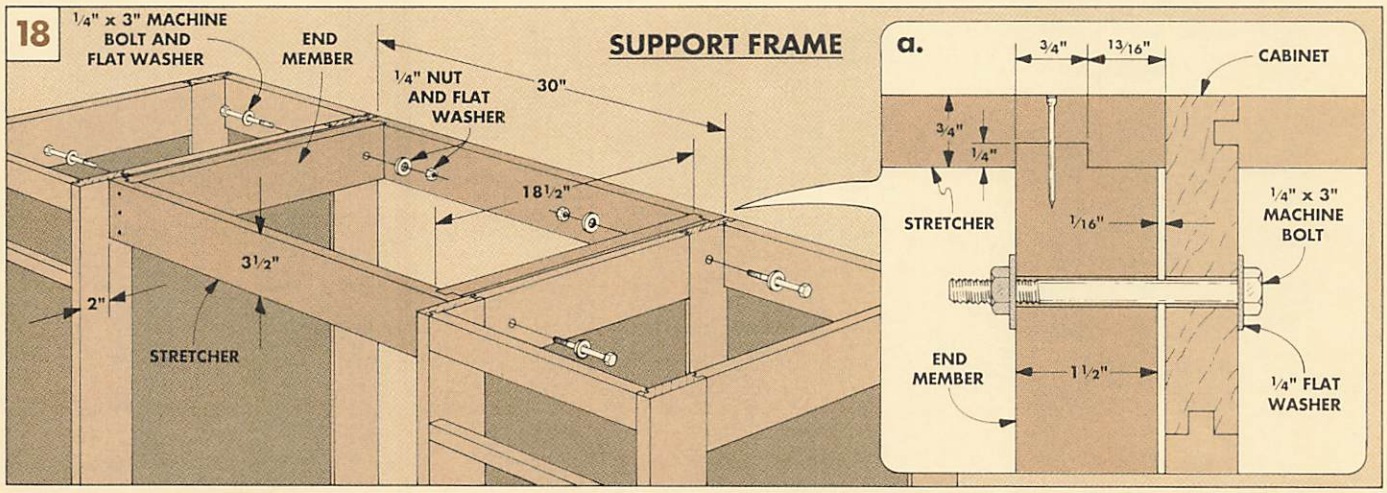

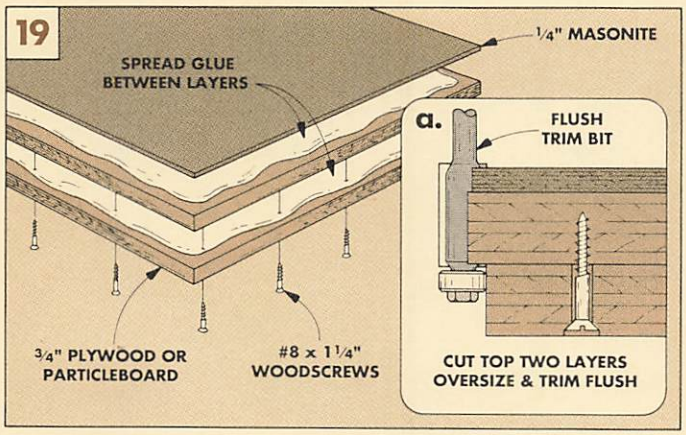

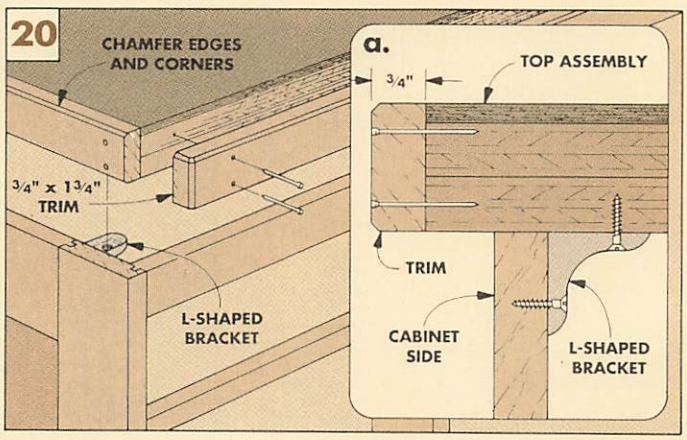

Drawer Joints

Whenever we build a project that has several drawers, (like the Shop Cabinets), we spend a great deal of time discussing how to build them. Most of the decisions involve two main points — the style of drawer front, and the joinery used to assemble the drawer.

LIPPED FRONTS. In the case of the Shop Cabinets, I decided to use a lipped front on the drawers. The most important factor here is covering the gap needed for the drawer runners.

To allow for the runners (or metal slides), the drawers require ½" clearance on each side. I used the lipped drawer front to cover this clearance space.

This could also be accomplished by using a false front (as on the File Cabinet, see page 6). But this requires more material because you're actually making two drawer fronts.

JOINERY. The next step is to determine what kind of joinery to use to assemble the drawer. I consider three factors for the joinery: strength, the time and tools required to build it, and the appearance of the joint.

STRENGTH. It's not just a matter of making the joint strong enough to hold the drawer together. The key factor is that the joint has to be strong enough to withstand the weight that's in the drawer, especially if it's jerked open or slammed shut.

This is the most critical factor for the drawers on the Shop Cabinet because of the weight of the tools that will be in them.

SPECIAL TOOLS. All of the joints shown below are strong enough, but they require varying amounts of time and special tools to build.

The nailed butt and locked rabbet joints can be cut easily on a table saw. But the sliding dovetail requires a dovetail bit and router table. And, of course, the half-blind dovetails require a special jig. (For more information, see *Woodsmith* No. 58.)

APPEARANCE. Finally, how important is the appearance of the joint? On the Shop Cabinets, appearance is not critical, unless you want to show off a little.

So, what's the final decision? In the main article, we showed the nailed butt joint because it's the easiest. But here are three more options.

NAILED BUTT JOINT

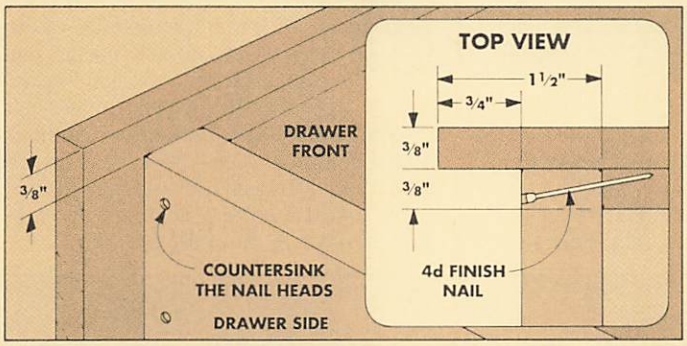

Of all the joints shown on this page, the nailed butt joint is the simplest to make and requires no specialized tools. This joint gets virtually all its strength from the nails driven through the sides and into the drawer front. To prevent the nails from working out, countersink the heads.

LOCKED RABBET JOINT

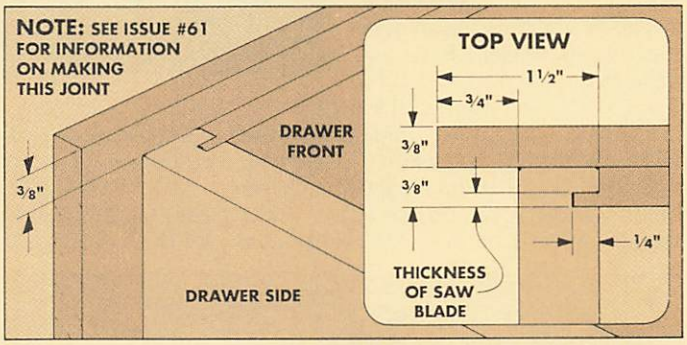

There are a couple of things I like about this joint. First, it provides a certain amount of interlocking strength. Second, it doesn't require any special tools, other than a table saw. The drawback to this joint is the glue surface — you're gluing mostly to end grain.

SLIDING DOVETAIL JOINT

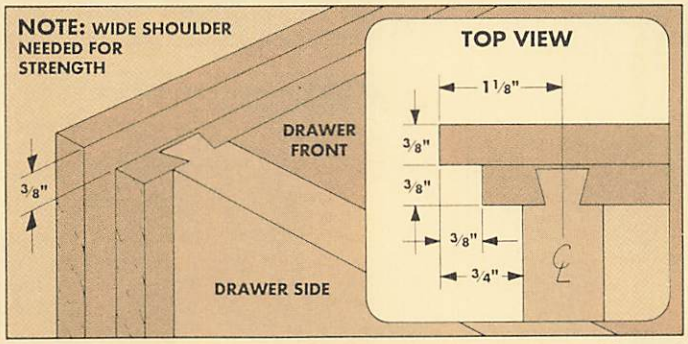

All that's needed to make this joint is a router table and a dovetail bit. The pieces interlock and have good glue surfaces. However, it can be difficult to get the pieces to fit together well. And if the dovetailed dado on the drawer front is too close to the edge, the edge may break off.

HALF-BLIND DOVETAIL JOINT

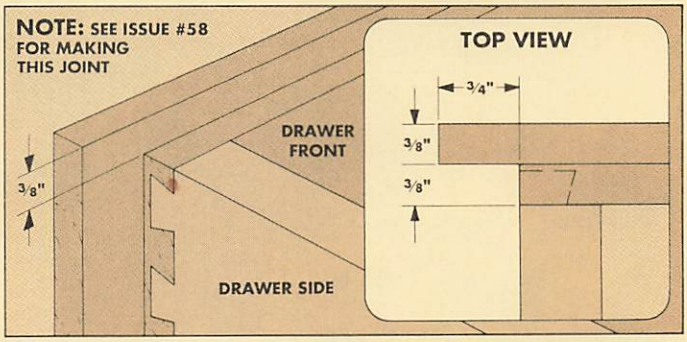

The half-blind dovetail joint stands out as one of the strongest and most decorative of all drawer joints. The pins and tails not only lock together, they provide an excellent glue surface. The only problem is that you need a special jig and a router, or you have to cut them by hand.

Kitchen Canister

Although the three-in-one design of this canister is unique, the plastic containers inside are the best part. The lids fit tight to keep out moisture, and the plastic containers don't give the contents an objectionable odor as wooden ones might.

I used Rubbermaid's "Servin' Saver" six cup (No. 5) containers, see page 31, but any plastic containers will work with some dimension changes. Once I had chosen the containers, the challenge was building an oak box to hold three of them for flour, sugar, and coffee.

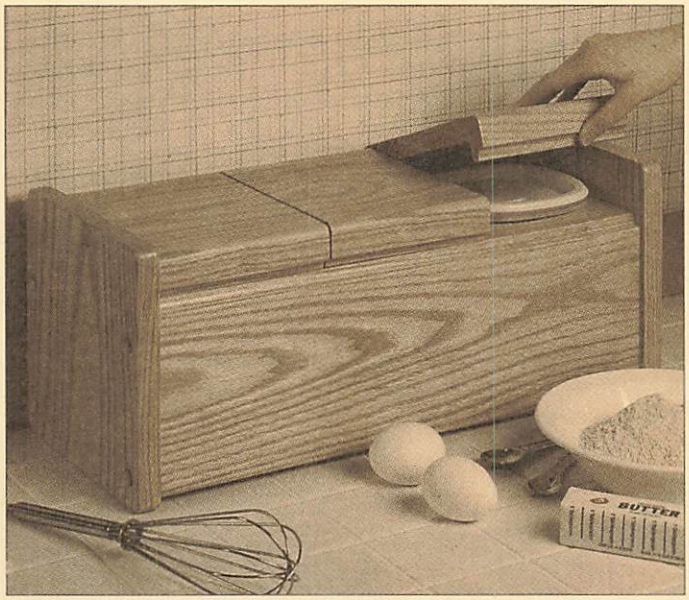

The box I built consists of two upside down U-shaped parts: a short lid and a tall case, see Fig. 1. The lid and the case are held together with a piano hinge and fit between two end pieces. All of the pieces are cut from ¾"-thick stock.

LID PARTS. Begin by cutting a **lid front (A)** to a width of 1½", see Fig. 1. To allow for a piano hinge, cut the **lid back (B)** narrower (1⁵⁄₁₆"). Then cut the **lid top (C)** ½" wider than the width of the lids on the plastic containers. (I cut mine, 6¼" wide.) I waited to cut the lid pieces to final length until I cut the case parts. (They're all the same length.)

CASE PARTS. The width (height) of the **case front (D)** and **back (E)** is determined by the height of the plastic containers. Measure the distance from the bottom of the container up to the rim and add ¼". (I cut these pieces 6" wide, see Fig. 1.)

Next cut a **case top (F)** the same width as the lid top (6¼"). Now cut each of the six pieces to a finished length of 18". (Again, this is for three Rubbermaid brand containers.)

ASSEMBLE CASE AND LID. After all the pieces are cut to length, glue-up the two U-shaped assemblies, see Fig. 2. (Shop Tip: To hold the pieces square while clamping, place temporary spacer blocks inside the assembly, see Fig. 2.)

ROUT. Once the glue dries, create a finger lift by routing a ⅜" cove on the top edge of the case front and also on the bottom of the lid front, see Fig. 1a. Then, to accommodate the piano hinge, rout a ³⁄₁₆" chamfer on the top of the case back and the bottom of the lid back, see Figs. 1b and 6a. Finally, round over the top edges of the lid and the bottom edges of the case (don't round over the ends), see Fig. 1c.

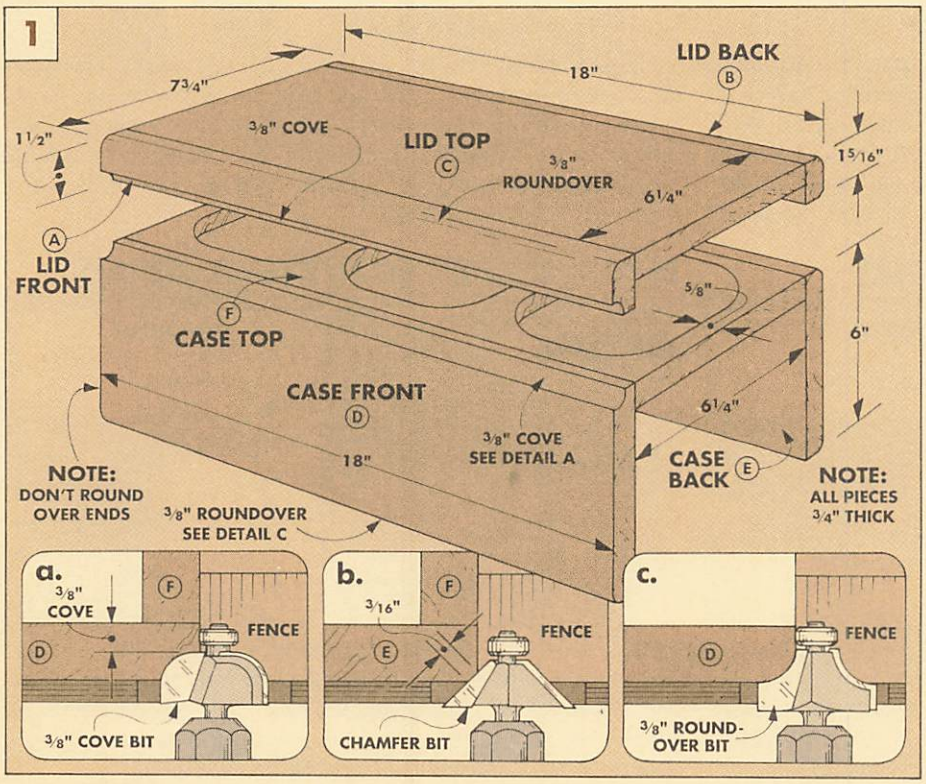

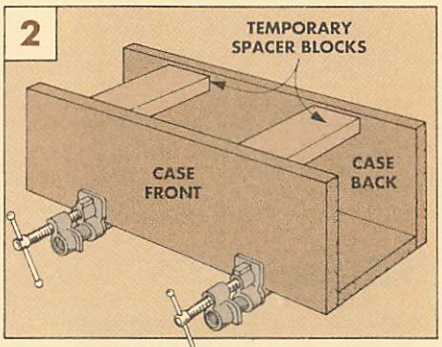

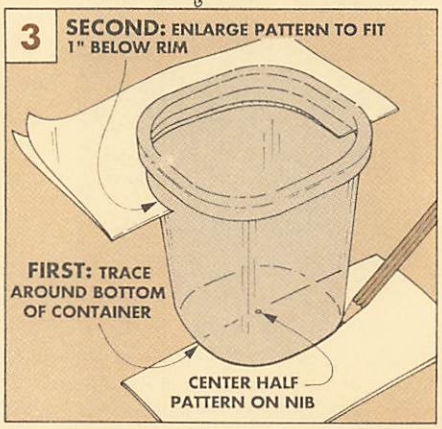

CONTAINER HOLES. The next step is to cut holes in the case top (F) for the plastic containers. To determine the correct size, I found it easiest to cut a paper pattern first, see Fig. 3. (A full size pattern of the case top with three holes is available, see page 31.)

To make your own pattern, first trace a half pattern of the *bottom* of the container onto a folded sheet of paper, see Fig. 3. Then cut out the hole and slowly enlarge it until the pattern fits around the container about 1" down from the rim. This will create a friction fit when the rim of the container is pushed down tight against the top of the case.

Now unfold the pattern and trace the holes onto the case top (F). Center one hole on the length, and position the outside edge of the other two holes 5/8" from the ends, see Fig. 1. Then cut out the holes for the containers.

ENDS. The **case ends (G)** are cut 1/2" wider than the lid and 1/2" longer (higher) than the combined height of the case and lid, see Fig. 4. This allows 1/4" overhang on all sides. After cutting the ends to size, soften each corner with a 3/8" radius. Then drill counterbored shank holes through each end piece (G) to screw it to the case, see Fig. 4a.

ASSEMBLY

Now, dry assemble the case with clamps. (Shop Tip: To position the parts so only the ends will touch the kitchen countertop after assembly, place a 1/4" temporary spacer block under the case, see Fig. 5.) Then drill pilot holes and screw the ends to the case. Finally, plug the holes, see Fig. 5a.

PIANO HINGE. To make it more convenient to access just one canister, I cut the lid into three sections. And, to keep the three sections aligned, I used a single piano hinge instead of three separate hinges. (*One* flap of the piano hinge has to be cut so each lid section will open separately.)

Start by cutting a 1 1/16"-wide piano hinge to fit between the two ends (18" long), and file the ends slightly for clearance with the case ends (G), see Fig. 6. Then position the hinge on the lid back (B) and case back (E) and drill pilot holes for the screws, see Fig. 6a. Now screw the hinge to the case *only*.

CUT THE LID. There are a few more steps before screwing the hinge to the lid. First, divide the lid into thirds, see Fig. 6. Next, to provide clearance between the case ends, trim 1/16" off both ends of the lid, see Fig. 6.

Then cut the lid apart with the saw blade centered on the dividing lines, see Fig. 7.

CUT THE HINGE. Now screw the three lid pieces to the piano hinge, and cut the *top half* of the hinge with a hacksaw at each saw kerf, see Fig. 8. (To protect the case top when cutting, I put a piece of scrap plywood under the lid.) Then angle the hacksaw and cut through the pivot pin, see Fig. 8a.

FINISH. Finally, I finished the canister with two coats of satin polyurethane.

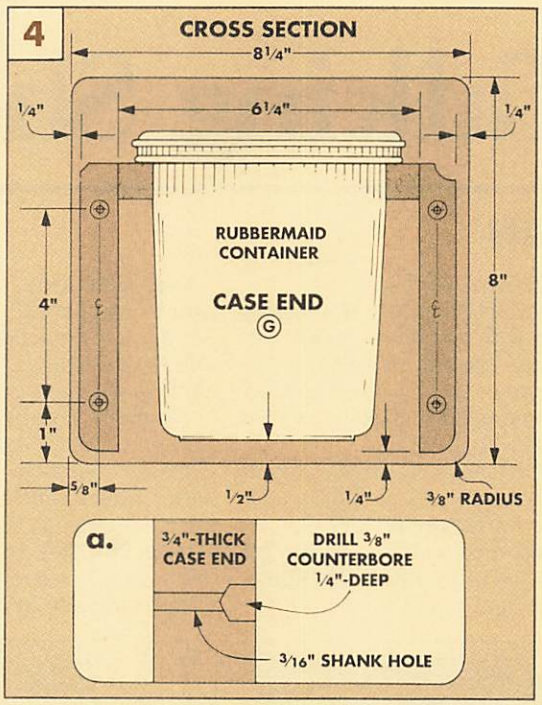

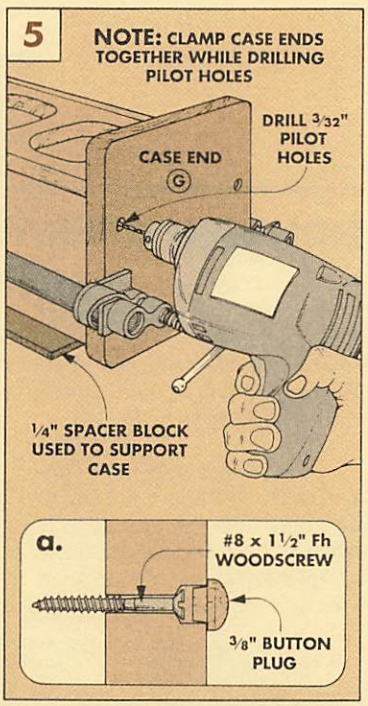

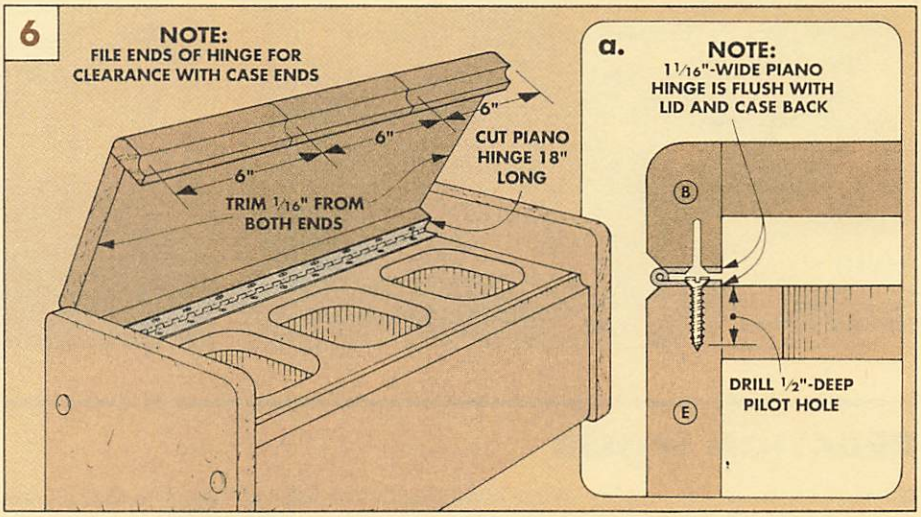

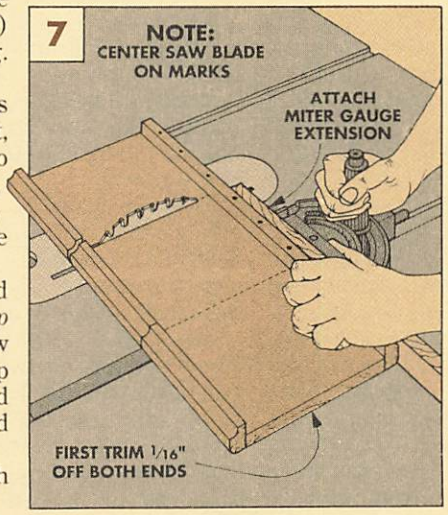

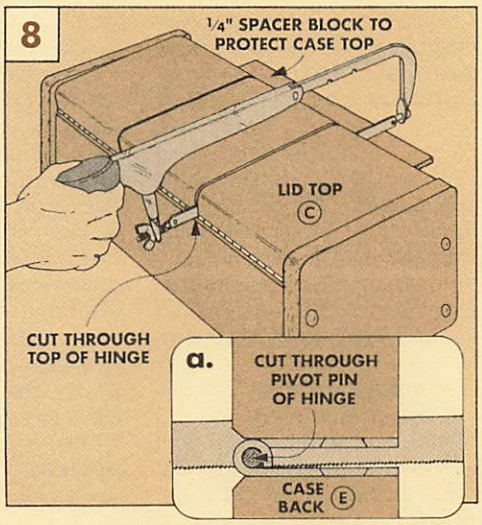

Talking Shop

ROUTING DIRECTION

■ *I want to cut circles with my router and a trammel point, but I have a question. Why did you say to rout circles clockwise in* Woodsmith *No. 21 and 72, but counterclockwise in No. 45?*

Bill Rees
Olympia, Washington

You're right, Bill, we did say to do it both ways. So which way is correct? If you're using a trammel point to rout circles in solid stock, it doesn't make much difference, see Fig. 1.

TRAMMEL POINT. When routing with a trammel point, the router can only move around in a circle, so you don't have to worry about it skipping or running with the grain.

Even chipout is rarely a problem when cutting solid stock using a trammel point. This is because the wood fibers are always backed up by other wood fibers, see Fig. 1a and 1b.

FEED DIRECTION. Feed direction is important, however, when you're reducing the size of a circle or molding the edge of a circle with a trammel point.

Normally I'd advise you to rout the outside edge of the circle counterclockwise to have better router control. But that can cause chipout, see Fig. 2.

BACK-ROUTING. To avoid chipout, you can "back-rout" the edge of the workpiece by moving the router clockwise, see Fig. 3.

Note: When back-routing an edge freehand, the router is harder to control. It tends to bounce along the edge and gouge the workpiece. But when using a trammel point, the router is held tightly in position and can't "bounce".

Back-routing prevents chipout since the wood being removed is supported by the stock in front of the bit, see Fig. 3.

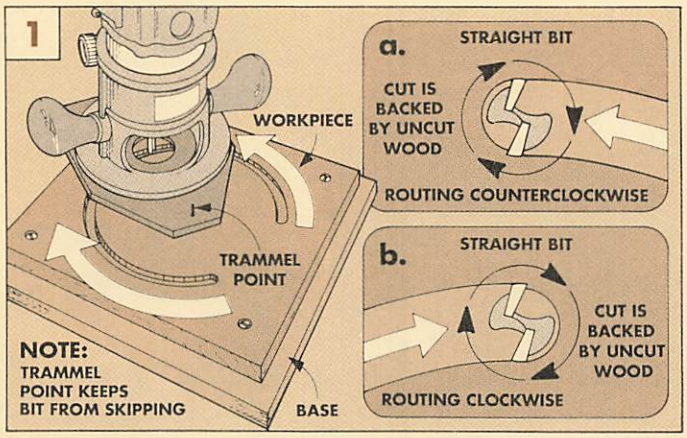

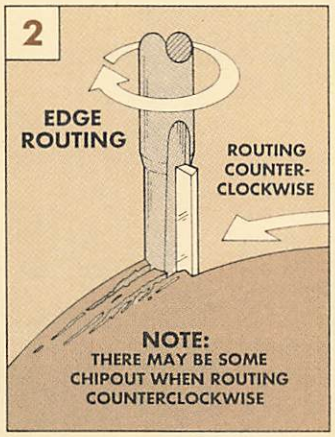

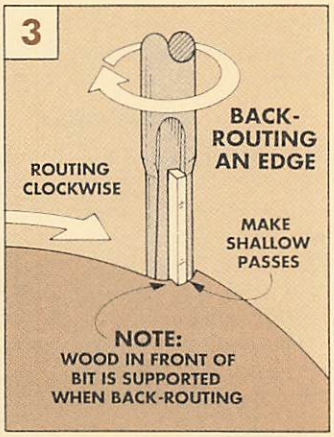

REACTION WOOD

■ *I recently ripped a lot of 4" to 6"-wide pieces of ¾" cherry. As I ripped them, some pieces bent away from the blade, and some didn't. Why did this happen, and is there a way to prevent it?*

James Clark
Garland, Texas

I've had a similar problem in the *Woodsmith* shop. As I ripped the wood, the kerf closed up and started to bind on the blade, or it opened up like a wishbone. From the way the wood bent, I knew I'd run into what's known as "reaction wood."

ABNORMAL GROWTH. The reason some pieces develop a "crook" or "edge bend" and others don't has to do with the the tree they were cut from. Your wood (and mine) was cut from a leaning tree, like one that grew out over a river, or got knocked partly over by the wind.

As the tree grew, it had to adjust or react to gravity trying to pull it down. So it developed some special cells in the trunk to keep itself standing. The wood that contains these special cells is called reaction wood.

REACTION WOOD. For some unknown reason, reaction wood is formed differently in hardwoods than in softwoods. When a leaning softwood tree reacts to gravity, the cells on the lower side of the trunk are compressed.

This compression wood is usually harder — but more brittle — than normal. (You may have come across a hard spot when nailing or cutting pine or fir.)

Reaction wood in hardwoods is called tension wood. This is because hardwoods' abnormal cells form on the top side of the trunk. They are "stretched" holding the tree up against the pull of gravity.

Tension wood is usually stronger than normal, so it's difficult to machine. And when cut, it often leaves a "woolly" surface that creates a blotchy finish.

ABNORMAL SHRINKAGE. There's another peculiarity to reaction wood. Unlike normal wood which shrinks mostly *across* the grain, reaction wood also shrinks *with* the grain — 10 to 20 times more than normal wood. And it shrinks unevenly. So even if you joint the edge straight, over time the edge is likely to bend again.

USING REACTION WOOD. Should you avoid using the other boards that came from the same log? Not necessarily. The severity of reaction wood varies from board to board. So if the rest of the wood seems normal, use it.

Can you avoid buying it? Probably not. Once logs are cut into boards, it's hard to tell if they contain reaction wood. Even a reputable lumber dealer won't know if he's selling you reaction wood. So if you do run into some, it's best not to use it, or else cut it into very short pieces for small projects — or your firewood pile.

RADIAL ARM MITER JIGS

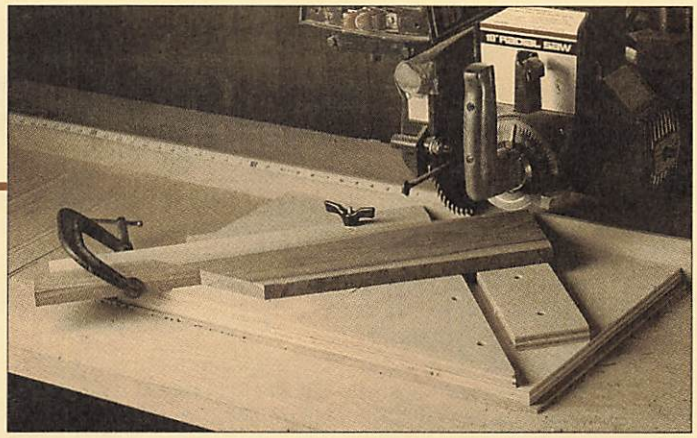

■ *Thirty years ago, I made a radial arm miter jig that's similar to the one you described in* Woodsmith *No. 72. But my jig consists of a simple triangular guide screwed onto a plywood base. What's the advantage of the extra guides, removable fences, and locking wing nuts?*

W. P. Westlake
East Dorset, Vermont

Your question brings up what may be one of the most basic facts about woodworking — there's seldom only *one* right way to do anything. Your miter jig will work perfectly well for cutting miters with a radial arm saw, see Fig. 1. If it does what you need it to do — don't change.

For a long time, that's how I felt about our earlier radial arm miter jig shown in *Woodsmith* No. 60, see Fig. 2. That jig consists of a pair of narrow fences screwed to the base, see Fig. 2.

The only difference between your jig and our earlier jig is in the placement of the workpiece when cutting the miter. On your jig, you pull the workpiece against the *outside* edge of the triangular guide. On the earlier *Woodsmith* jig, the workpiece is pressed against the *inside* edge of the fence.

Since they both work, why build a more complicated jig like the one from *Woodsmith* No. 72? (Refer to photo above.) Two reasons — versatility and control.

VERSATILITY. I think your jig and the earlier *Woodsmith* jig have a similar drawback — the width of the workpiece is limited (by the saw fence on yours; by the jig's second fence on ours). But on the latest *Woodsmith* miter jig the fences are removable so it doesn't have this limitation, see photo above.

EXTRA CONTROL. The second reason for building the latest miter jig is control. If you've ever had a workpiece "creep" when cutting a miter, you'll know why I like the extra control that you get with the new jig.

Having a fence on the back side of a radial arm miter jig counters the pull on a workpiece from the spinning blade. On jigs with an inside guide (like yours) you have to hold the workpiece very tightly to prevent the spinning blade from pulling the piece away from the guide.

The higher, narrower fence on the latest jig makes the workpiece easier to grasp. And that means less force is needed to counter the pull of the blade. This makes cutting miters with the radial arm saw more accurate — and safer.

There's one last benefit. You can add a long fence to the new jig. With that and a stop block, you can cut longer identical miters than with a jig that has a fixed support.

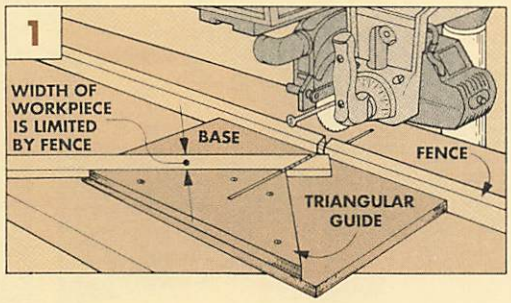

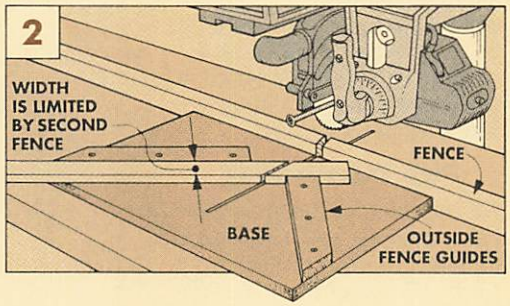

OGEE VS. ROMAN OGEE

■ I routed an S-shaped profile on the drawer fronts, top molding, and kickboard of the File Cabinet shown on page 6 of this issue.

Selecting the bit to rout that profile can be confusing since there are two S-shaped router bits that look very much alike, the ogee and the Roman ogee.

HOW TO TELL. Here's how to tell them apart. The Roman ogee bit has a *convex* curve next to the bearing, see Fig. 1. An ogee bit has a *concave* curve coming off the pilot bearing, see Fig. 2. So an ogee bit cuts the reverse of the profile cut by the Roman ogee.

Because the bits cut reverse profiles, they are theoretically interchangeable — you could use the more common Roman ogee to form an ogee profile. But to do this, you must hold the workpiece *vertically* on the router table, see Fig. 3. And this can result in chipout on the face when cutting across the grain.

USE THE RIGHT BIT. The recommended (and safest) way to rout an ogee is the traditional way — with an ogee bit, see Fig. 4. You can rout the workpiece flat on the router table or hold the router freehand. This way you have better control and get a cleaner cut. (For sources of ogee bits, see Alternate Catalog Sources on page 31.)

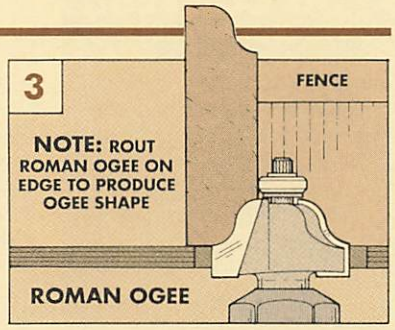

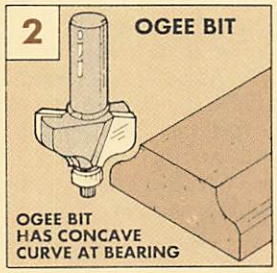

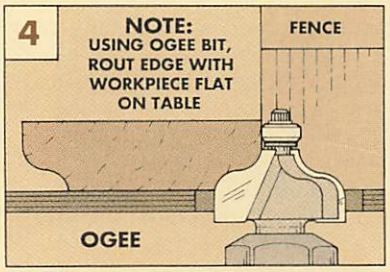

Clamp Organizers

Everybody thinks his shop is too small — at least that was the opinion expressed by most of the entries in the clamp organizer contest (announced in *Woodsmith* No. 72). The phrase used most often was "in order to save space...." So this had a major influence on our thinking when we chose the winners.

Besides taking up little space, the clamp organizers we selected are also adaptable to any number of clamps. They fit most common types of clamps, and they're easy to construct.

SLIDING "T" RACK

Some of the least used space in most shops is right underneath the top of the workbench. And the sliding "T" rack sent in by Robin Coggeshall of Fowler, Illinois takes advantage of that, see Fig. 1.

SLIDES UNDER BENCH. This plywood "T" rack pulls out from under the workbench on a pair of L-shaped runners, and gives easy access to the clamps. Then it slides back under the bench when not in use.

The "T" rack is 4" across the top and about 5" high. It's the same length as the bench top is wide, and it holds an assortment of C-clamps, spring clamps, and hand screws.

C-CLAMP RACK

C-clamps are among the most difficult to organize. They easily fall off hooks and bar racks. Or else you have to tighten and loosen them to get them on and off the rack.

Our favorite design for C-clamps gets around these problems. It came from Morris Lefkowitz of Camarillo, California, see Fig. 2. It's designed to hang on a wall over a workbench or set-up table. The clamps are loaded mouth down at the back of the tilted table or ramp.

"GRAVITY" FEED. The ramp is tilted 10° down at the front (see Fig. 2a) so the clamps slide down the ramp to the lip on the front edge. To remove one, just lift it up about ½" and tilt it forward.

Racks can be easily varied in size and length to accommodate your C-clamp collection.

PIPE CLAMP RACK

No collection of clamp organizers is complete without a rack for pipe clamps. This one, from Corky Gipson of Prescott, Wisconsin holds pipe clamps or "I" bar clamps, see Fig. 3. What we really like about this rack is its simplicity, and that the clamps can't accidently fall off.

SIMPLE AND SAFE. The rack is made from a 2x6 back plate and a 1x4 front rail separated by 2" spacers. To hang a pipe clamp on the rack, just turn the clamp head sideways and slide it up through the gap, see Fig. 3a. Then give it a quarter turn and set the head down on the front rail, see Fig. 3b. The clamp hangs securely. And you don't need a lower rail to stabilize the clamps.

The rack can be made long enough for any number of clamps. We found that cutting shallow dadoes across the top of the front rail kept the clamps neatly spaced on the rack.

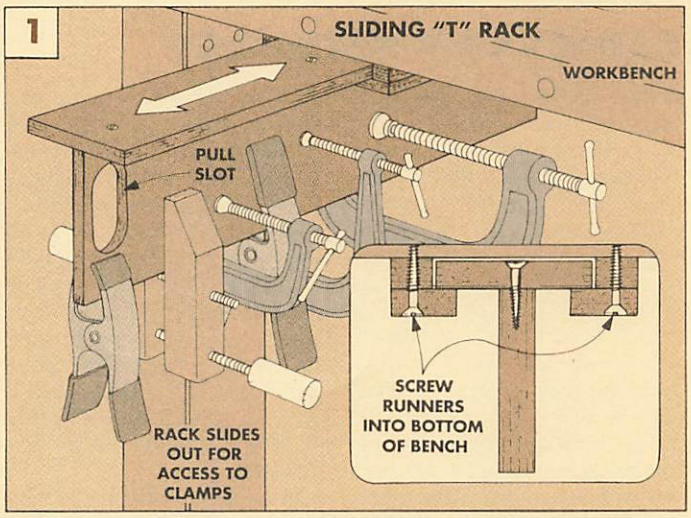

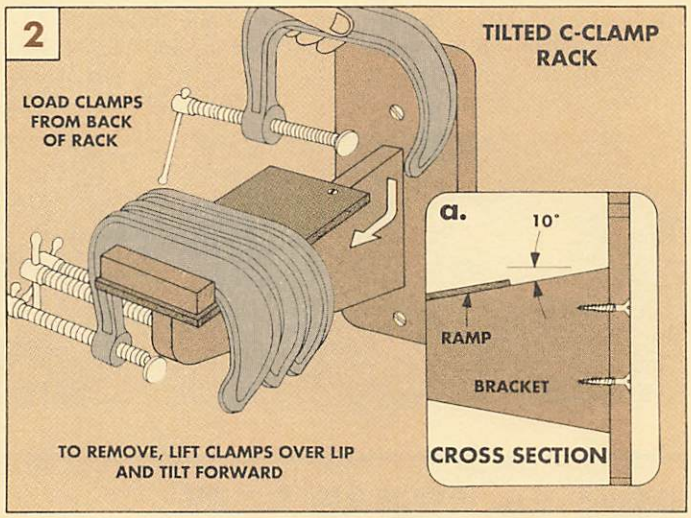

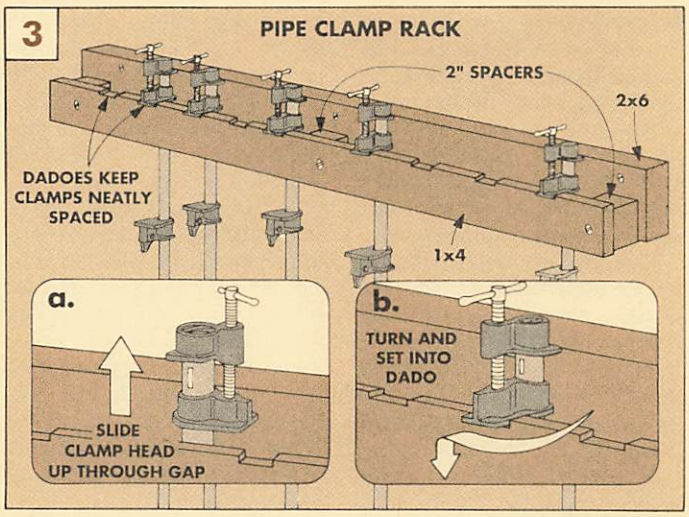

$100 CONTEST

WOOD STORAGE

What's the best way to store wood for future projects, and scrap from past projects? If you have a good storage system for lumber or plywood (and other sheet materials), tell us about it.

We'll publish the best lumber and plywood storage designs and ideas in upcoming issues of *Woodsmith*. Winners will receive $100 and a *Woodsmith* Master Try Square. Duplicate or similar entries will be considered in the order we receive them. Send your lumber and plywood storage ideas (postmarked no later than May 15, 1991) to Shop Tips Contest, *Woodsmith*, 2200 Grand Ave., Des Moines, Iowa 50312.

Sources

OAK FILE CABINET

Woodsmith Project Supplies is offering a hardware kit for the Oak File Cabinet shown on page 6. The kit includes the brass card holders and drawer pulls in addition to full extension Accuride drawer slides, see photo.

A Note About The Slides: We strongly recommend that if you're building the File Cabinet you use full extension, silent ball bearing slides such as those made by Accuride. These are first-class slides that allow you to pull the drawer all the way out to get at the last file folder, see photo on page 32. And, since they're load rated to 110 lbs., you can fill a drawer with heavy files and it will still operate smoothly.

Oak File Cabinet

774-100 Oak File Cabinet Hardware Kit $59.95

- (2) Solid Brass Card (Name Plate) Holders, 2" x 2⅞", Brass Mounting Screws
- (2) Solid Brass Drawer Pulls, 4" Centers, Brass Screws
- (2 pr.) Accuride Full Extension File Drawer Slides, 20" Long, Includes Mounting Screws And Installation Instructions

FILES. We're also offering separately file frames to fit the File Cabinet and letter size hanging files, see inset photo.

762-106 File Frame, Fits Letter Size File Cabinet, (Order one per drawer) ..... $5.95 each

774-150 Hanging Files, Package of 25, Plastic Label Tabs Included.....$10.95 pkg.

FINISH. We used General Finishes Sealacell Two-Step System to finish the File Cabinet. The first step (Sealacell) is a tung oil sealer and stain. (We chose pecan stain as it offered a light brown color that's typical of this style oak file cabinet.) The second step (Royal Finish) is an oil and urethane top coat.

761-503 Sealacell (Pecan) Stain and Sealer.....$5.95 pint

761-502 Royal Finish Oil and Urethane Top Coat.....$6.45 pint

SHOP CABINETS

You can build the Shop Cabinets shown on page 18 in a variety of configurations. So **Woodsmith Project Supplies** is offering the hardware you need as *separate* items instead of a kit. Choose the items to fit your needs.

Hinges

767-301 ⅜" Semi-Concealed, Inset Hinges, Brass-Plated, With Screws .....$3.50 pr.

Door Catch

774-205 Roller Door Catch With Screws, (one catch needed per door) .....$.75 each

Mounting L-Brackets

774-208 Mounting L-Brackets, (These are used to attach the bench top to the cabinets. We recommend you use four brackets per cabinet.), With No. 6 x ⅝" Fh Screws.....$.30 each
Four or more .....$.25 each

Drawer Slides

Note: On page 22, we showed how to make wooden drawer slides for the Shop Cabinets. You could also use metal side-mounted slides. The Knape & Vogt (KV) slides we're offering below are rated to hold 75 lbs.

774-210 20"-Long KV Drawer Slides, With Mounting Screws and Instructions .....$6.95 pair

Vise

In the photo on page 18, a Quick-Release Record No. 52D Vise is shown mounted to the bench. This cast iron vise is available from **Woodsmith Project Supplies.** The jaws measure 7" wide by 3" high and open to a full 8¼". Mounting instructions are included. (Note: Hardware to mount the vise and wooden jaw pads are *not* included.)

766-102 Quick-Release Record No. 52D Vise..... $99.95

KITCHEN CANISTER

Woodsmith Project Supplies is offering a hardware kit to make the Kitchen Canister shown on page 26. Included are three Rubbermaid containers, a full-size pattern of the case top (only), a piano hinge, and oak screw hole buttons. (This kit does *not* include wood or finish.)

Kitchen Canister Hardware

774-300 Kitchen Canister Hardware Kit..... $19.95

- (3) Rubbermaid Servin' Saver Containers, Holds 6 Cups Each
- (1) Full-Size Paper Pattern Of Case Top, 6¼" x 18"
- (1) Brass-Plated Piano Hinge, 1 1/16" x 18", With Screws
- (8) Oak Screw Hole Buttons, Mushroom-type, Fit ⅜" Hole

ORDER INFORMATION

BY MAIL

To order by mail, use the form enclosed with a current issue. The order form includes information on handling and shipping charges, and sales tax. Send your mail order to:

Woodsmith Project Supplies
P.O. Box 10350
Des Moines, IA 50306

BY PHONE

For fastest service use our Toll Free order line. Open Monday through Friday, 8:00 AM to 5:00 PM Central Time.

Before calling, have your VISA, Master Card, or Discover Card ready.

1-800-444-7002

Note: Prices subject to change after June, 1991.

ALTERNATE CATALOG SOURCES

Similar hardware and supplies may be found in the following catalogs. Please call each company for a catalog or information.

Constantine's
800–223-8087
Slides, Hinges, Vises, Buttons

Grizzly Imports, Inc.
800–541-5537
Ogee (Panelling) Bit, Vises

Trendlines
800–767–9999
Slides, Buttons

Woodcraft
800–225–1153
Slides, Vises, Buttons

The Woodworkers' Store
612–428–2199
Slides, Finishes, Hinges, Vises

Woodworker's Supply of NM
800–645–9292
Slides, Ogee Bit, Hinges, Vises

Final Details

Shop Cabinets

Stub Tenon Joinery

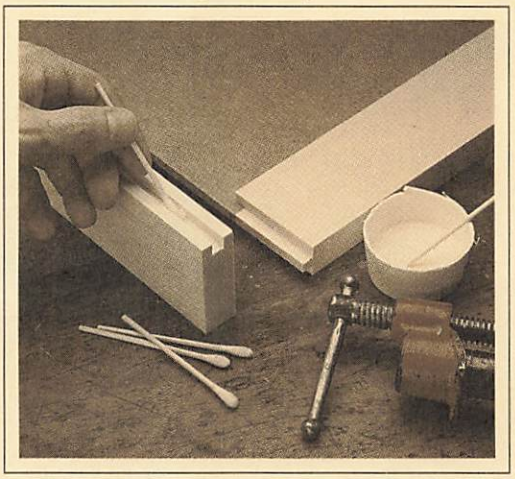

▲ *When using a panel of Masonite or plywood, the stub tenon and groove joint is a strong, easy to make alternative to a mortise and tenon. The groove is sized to hold the tenon and the panel.*

◄ *This counter-height island workbench is made from four of our single Shop Cabinets. Under the bench top, a variety of drawers and doors provide ample storage for all of your tools.*

Oak File Cabinet

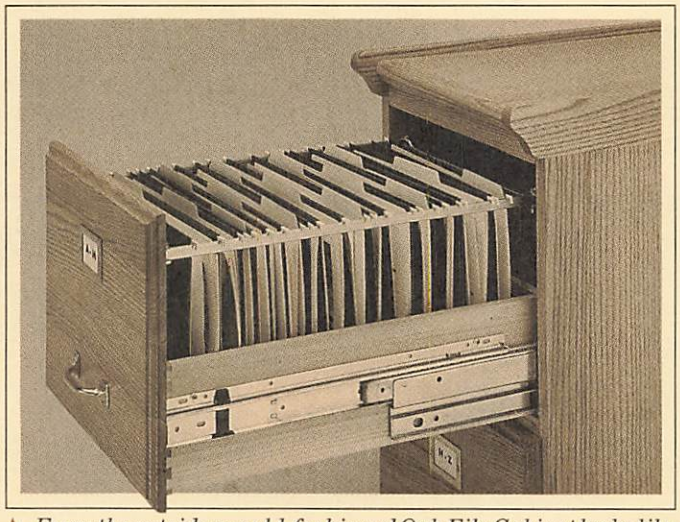

▲ *From the outside our old-fashioned Oak File Cabinet looks like a fine antique. But on the inside full-extension drawer slides hold heavy files and allow access to the very last file.*

Kitchen Canister

▲ *This solid oak canister will look great on any kitchen counter. To keep food fresh, there's an airtight plastic container under each lid.*